COMMERCIAL DC
VEHICULAR SWING GATE OPERATOR

INSTALLATION MANUAL

Model **CSW24UL**

OPERATOR REQUIRES A LIFTMASTER EXTERNAL MONITORED ENTRAPMENT PROTECTION DEVICE BE INSTALLED IN ALL ENTRAPMENT ZONES

- THIS PRODUCT IS TO BE INSTALLED AND SERVICED BY A TRAINED GATE SYSTEMS TECHNICIAN ONLY.
- This model is for use on vehicular passage gates ONLY and not intended for use on pedestrian passage gates.
- This model is intended for use in Class I, II, III and IV vehicular swing gate applications.
- Visit LiftMaster.com to locate a professional installing dealer in your area.
- This gate operator is compatible with MyQ® and Security+ 2.0® accessories.

Access installation and technical support guides or register this product

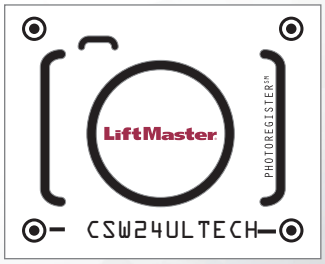

1. **Take a photo** of the camera icon including the points (◉).
2. **Send it in** by texting the photo to 71403.

c UL us LISTED

LiftMaster
300 Windsor Drive
Oak Brook, IL 60523

LiftMaster® ELITE SERIES®

TABLE OF CONTENTS

SAFETY 2
Safety Symbol and Signal Word Review....2
Usage Class....3
UL325 Entrapment Protection Requirements....3
Safety Installation Information....4
Gate Construction Information....5

INTRODUCTION 6
Carton Inventory....6
Operator Specifications....7
Site Preparation....8
Check Your Gate....8

INSTALLATION 9
Types of Installations....9
Step 1 Determine Location for Concrete Pad and Operator....10
Step 2 Concrete Pad and Operator Attachment....12
Step 3 Position the Gate Bracket....13
Step 4 Adjust the Operator Arm Length....13
Step 5 Secure the Operator Arm....14
Step 6 Install Entrapment Protection....15
Step 7 Earth Ground Rod....17
Step 8 Power Wiring....17
Step 9 Connect Batteries....19
Step 10 Dual Gate Setup....21
Step 11 Install the Cover....23

ADJUSTMENT 24
Limit and Force Adjustment....24
Obstruction Test....25

PROGRAMMING 26
Remote Controls (Not Provided)....26
LiftMaster Internet Gateway (not provided)....27
Erase All Codes....27
Erase limits....27
Gate Hold Open Feature....27
To Remove and Erase Monitored Entrapment Protection Devices....27

OPERATION 28
Gate Operator Setup Examples....28
Control Board Overview....29
Manual Disconnect....30
Reset Switch....30
Operator Alarm....30
Remote Control....30

ACCESSORY WIRING 31
External Control Devices....31
Locks....32
Miscellaneous Wiring....32

EXPANSION BOARD 33
Expansion Board Overview....33
Aux relay 1 and 2....34
Wiring Accessories to the Expansion Board....35

MAINTENANCE 36
Important Safety Instructions....36
Maintenance Chart....36
Batteries....37

TROUBLESHOOTING 38
Diagnostic Codes....38
Diagnostic Codes Table....39
Control Board LEDs....41
Troubleshooting Chart....42

APPENDIX 45
Step 8 Solar Panel(s)....45
SAMS Wiring with Relays Not Energized....49
Dual Gate Settings....49
Limit Setup with a Remote Control....50

WIRING DIAGRAM 51

REPAIR PARTS 52

ACCESSORIES 53

WARRANTY 55

SAFETY

Safety Symbol and Signal Word Review

When you see these Safety Symbols and Signal Words on the following pages, they will alert you to the possibility of ***Serious Injury or Death*** if you do not comply with the warnings that accompany them. The hazard may come from something mechanical or from electric shock. Read the warnings carefully.

When you see this Signal Word on the following pages, it will alert you to the possibility of damage to your gate and/or the gate operator if you do not comply with the cautionary statements that accompany it. Read them carefully.

IMPORTANT NOTE:

- *BEFORE attempting to install, operate or maintain the operator, you must read and fully understand this manual and follow all safety instructions.*
- *DO NOT attempt repair or service of your gate operator unless you are an Authorized Service Technician.*

⚠ WARNING

MECHANICAL

⚠ WARNING

ELECTRICAL

⚠ CAUTION

WARNING: This product can expose you to chemicals including lead, which are known to the State of California to cause cancer or birth defects or other reproductive harm. For more information go to *www.P65Warnings.ca.gov*.

Usage Class

Class I - Residential Vehicular Gate Operator

A vehicular gate operator (or system) intended for use in garages or parking areas associated with a residence of one-to four single families.

Class II - Commercial/General Access Vehicular Gate

A vehicular gate operator (or system) intended for use in a commercial location or building such as a multi-family housing unit (five or more single family units), hotel, garages, retail store, or other buildings accessible by or servicing the general public.

Class III - Industrial/Limited Access Vehicular Gate

A vehicular gate operator (or system) intended for use in an industrial location or building such as a factory or loading dock area or other locations not accessible by or intended to service the general public.

Class IV - Restricted Access Vehicular Gate Operator

A vehicular gate operator (or system) intended for use in a guarded industrial location or building such as an airport security area or other restricted access locations not servicing the general public, in which unauthorized access is prevented via supervision by security personnel.

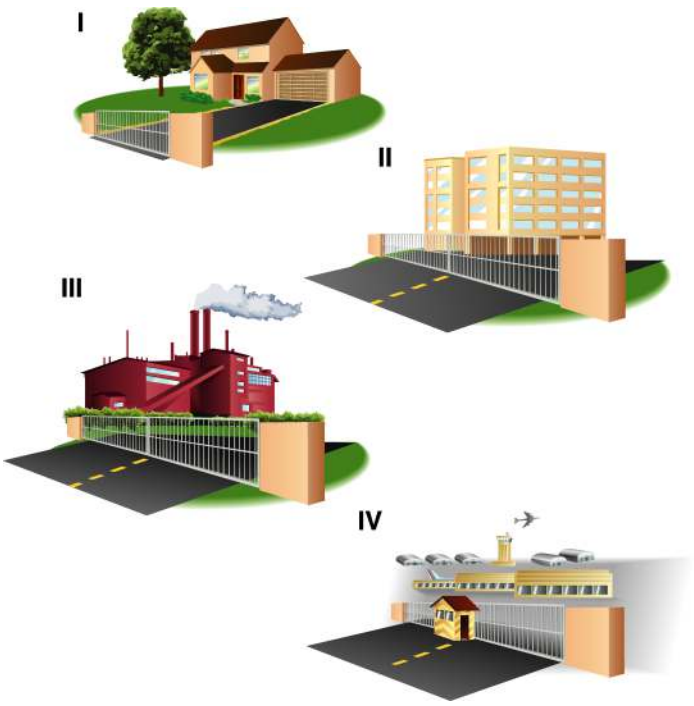

UL325 Entrapment Protection Requirements

- A **minimum of two** independent* monitored entrapment protection devices are required to be installed at each entrapment zone
- Every installation is unique. It is the responsibility of the installer to install external monitored entrapment protection devices in **each entrapment zone**
- This vehicular swing gate operator will operate only after installation of a **minimum of two** independent* monitored entrapment protection devices in either the open or close direction. If no entrapment zone exists in the other direction of gate travel, then the inherent (built into the operator) is all that is required in that direction.
- Entrapment protection device types include inherent (built into the operator), monitored external photoelectric sensors or monitored external edge sensors
- This operator is provided with an inherent entrapment protection device built into the operator that serves as one of the two independent devices

* Independent - the same type of device shall NOT be used for both entrapment protection devices.

IMPORTANT SAFETY INSTRUCTIONS

⚠ WARNING

To reduce the risk of INJURY or DEATH:

- READ AND FOLLOW ALL INSTRUCTIONS.
- NEVER let children operate or play with gate controls. Keep the remote control away from children.
- ALWAYS keep people and objects away from the gate. NO ONE SHOULD CROSS THE PATH OF THE MOVING GATE.
- Test the gate operator monthly. The gate MUST reverse on contact with an object or reverse when an object activates the noncontact sensors. After adjusting the force or the limit of travel, retest the gate operator. Failure to adjust and retest the gate operator properly can increase the risk of INJURY or DEATH.
- Use the emergency release ONLY when the gate is not moving.
- KEEP GATES PROPERLY MAINTAINED. Read the owner's manual. Have a qualified service person make repairs to gate hardware.
- The entrance is for vehicles ONLY. Pedestrians MUST use separate entrance.
- **SAVE THESE INSTRUCTIONS.**

Safety Installation Information

1. Vehicular gate systems provide convenience and security. Gate systems are comprised of many component parts. The gate operator is only one component. Each gate system is specifically designed for an individual application.
2. Gate operating system designers, installers and users must take into account the possible hazards associated with each individual application. Improperly designed, installed or maintained systems can create risks for the user as well as the bystander. Gate systems design and installation must reduce public exposure to potential hazards.
3. A gate operator can create high levels of force in its function as a component part of a gate system. Therefore, safety features must be incorporated into every design. Specific safety features include:
   - Edges Sensors (contact)
   - Photoelectric Sensors
   - Vertical Posts
   - Instructional and Precautionary Signage
4. Install the gate operator only when:
   a. The operator is appropriate for the construction and the usage class of the gate.
   b. All exposed pinch points are eliminated or guarded, and guarding is supplied for exposed rollers.
5. The operator is intended for installation only on gates used for vehicles. Pedestrians must be supplied with a separate access opening. The pedestrian access opening shall be designed to promote pedestrian usage. Locate the gate such that persons will not come in contact with the vehicular gate during the entire path of travel of the vehicular gate.
6. The gate must be installed in a location so that enough clearance is supplied between the gate and adjacent structures when opening and closing to reduce the risk of entrapment. Swinging gates shall not open into public access areas.
7. The gate must be properly installed and work freely in both directions prior to the installation of the gate operator.
8. Permanently mounted access controls intended for users to activate, must be located at least 6 feet (1.8 m) away from any moving part of the gate and where the user is prevented from reaching over, under, around or through the gate to operate the controls. Outdoor or easily accessible controls shall have a security feature to prevent unauthorized use. Exception: Emergency access controls only accessible by authorized personnel (e.g. fire, police) may be placed at any location in the line-of-sight of the gate.
9. The Stop and/or Reset (if provided separately) must be located in the line-of-sight of the gate. Activation of the reset control shall not cause the operator to start.
10. A minimum of two (2) WARNING SIGNS shall be installed in the area of the gate. Each placard is to be visible by persons located on the side of the gate on which the placard is installed.
11. For a gate operator utilizing a non-contact sensor:
    a. Reference owner's manual regarding placement of non-contact sensor for each type of application. See Install Entrapment Protection section.
    b. Care shall be exercised to reduce the risk of nuisance tripping, such as when a vehicle trips the sensor while the gate is still moving.
    c. One or more non-contact sensors shall be located where the risk of entrapment or obstruction exists, such as the perimeter reachable by a moving gate or barrier.
12. For a gate operator utilizing a contact sensor such as an edge sensor:
    a. One or more contact sensors shall be located where the risk of entrapment or obstruction exists.
    b. A hard wired contact sensor shall be located and its wiring arranged so the communication between the sensor and the gate operator is not subject to mechanical damage.
    c. A wireless device such as one that transmits radio frequency (RF) signals to the gate operator for entrapment protection functions shall be located where the transmission of the signals are not obstructed or impeded by building structures, natural landscaping or similar obstruction. A wireless device shall function under the intended end-use conditions.
    d. One or more contact sensors shall be located on the inside and outside leading edge of a swing gate. Additionally, if the bottom edge of a swing gate is greater than 4 inches (10.1 cm) but less than 16 inches (406 mm) above the ground at any point in its arc of travel, one or more contact sensors shall be located on the bottom edge.

Gate Construction Information

Vehicular gates should be installed in accordance with ASTM F2200: Standard Specification for Automated Vehicular Gate Construction. For a copy, contact ASTM directly at 610-832-9585 or www.astm.org.

1. General Requirements

1.1 Gates shall be constructed in accordance with the provisions given for the appropriate gate type listed, refer to ASTM F2200 for additional gate types.

1.2 Gates shall be designed, constructed and installed to not fall over more than 45 degrees from the vertical plane, when a gate is detached from the supporting hardware.

1.3 Gates shall have smooth bottom edges, with vertical bottom edged protrusions not exceeding 0.50 inches (12.7 mm) when other than the exceptions listed in ASTM F2200.

1.4 The minimum height for barbed tape shall not be less than 8 feet (2.44 m) above grade and for barbed wire shall not be less than 6 feet (1.83 m) above grade.

1.5 An existing gate latch shall be disabled when a manually operated gate is retrofitted with a powered gate operator.

1.6 A gate latch shall not be installed on an automatically operated gate.

1.7 Protrusions shall not be permitted on any gate, refer to ASTM F2200 for Exceptions.

1.8 Gates shall be designed, constructed and installed such that their movement shall not be initiated by gravity when an automatic operator is disconnected, in accordance with the following.

1.8.1 Vehicular horizontal swing gate. Shall not result in continuous, unimpeded movement in either direction along the arc of its path of travel.

1.9 For pedestrian access in the vicinity of an automated vehicular gate, a separate pedestrian gate shall be provided. The pedestrian gate shall be installed in a location such that a pedestrian shall not come in contact with a moving vehicular access gate. A pedestrian gate shall not be incorporated into an automated vehicular gate panel.

2. Specific Applications

2.1 Any non-automated gate that is to be automated shall be upgraded to conform to the provisions of this specification.

2.2 This specification shall not apply to gates generally used for pedestrian access and to vehicular gates not to be automated.

2.3 When the gate operator requires replacement, the existing gate shall be upgraded to conform to the provisions of this specification.

2.4 When the gate of an automated gate system requires replacement, the new gate shall conform to the provisions of this specification.

3. Vehicular Horizontal Swing Gate

3.1 The following provisions shall apply to Class I, Class II and Class III vehicular horizontal swing gates:

3.1.1 Gates shall be designed, constructed and installed so as not to create an entrapment area between the gate and the supporting structure or other fixed object when the gate moves toward the fully open position, subject to the provisions in 3.1.1.1 and 3.1.1.2

3.1.1.1 The width of an object (such as a wall, pillar or column) covered by a swing gate when in the open position shall not exceed 4 inches (102 mm), measured from the center line of the pivot point of the gate. Exception: For a gate not in compliance with this provision, the defined area must be provided with entrapment protection per UL 325.

3.1.1.2 Except for the zone specified in Section 3.1.1.1, the distance between a fixed object such as a wall, pillar or column, and a swing gate when in the open position shall not be less than 16 inches (406 mm). Exception: For a gate not in compliance with this provision, the defined area must be provided with entrapment protection per UL 325.

3.2 Class IV vehicular horizontal swing gates shall be designed, constructed and installed in accordance with security related parameters specific to the application in question.

Carton Inventory

NOT SHOWN: Documentation packet and hardware bag

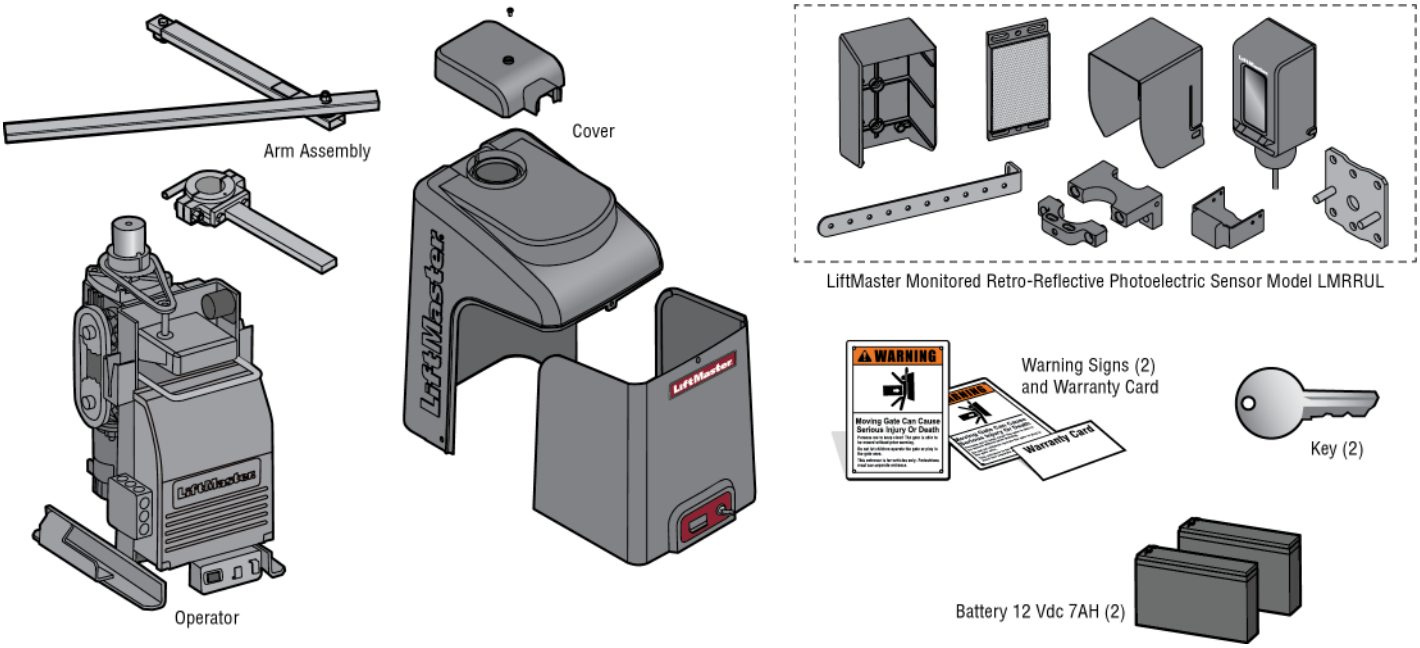

Operator Specifications

Usage Classification	Class I, II, III, & IV
Main AC Supply	120 Vac, 4 Amps (10 Amps including Accessory Outlets) **OR** 240 Vac, 2 Amps When Optional Transformer Kit Model 3PHCONV is installed in the field, operator is rated 208/240/480/575 VAC, 4.8/4.2/2.1/1.7 A, 60 Hz, 1 PH
System Operating Voltage	24 Vdc Transformer Run / Battery Backup
Accessory Power	24 Vdc, 500mA max. for ON + SW (switched)
Solar Power Max	24 Vdc at 60 watts max.
Maximum Gate Weight/Length	1200 lbs. (544.3 kg)/12 foot (3.7 m) 800 lbs. (362.9 kg)/16 foot (4.9 m) 600 lbs. (272.2 kg)/18 foot (5.5 m)
90 Degree Travel Time*	20 seconds
Maximum Travel Range*	115 degrees
Maximum Daily Cycle Rate	Continuous
Maximum Duty Cycle	Continuous
Operating Temperature	Without Heater: -20°C to 60°C (-4°F to 140°F) With Optional Heater: -40°C to 60°C (-40°F to 140°F)
Expansion Board	Provided
External Entrapment Protection Device Inputs (non-contact and/or contact)	Main board - up to 2 close entrapment protection devices and 1 open entrapment protection device. Expansion board - up to 3 entrapment protection devices configurable to either close or open and up to 4 edge sensors using wireless edge sensor kit model LMWEKITU .

**Travel time and range are affected by A and B mounting dimensions, see INSTALLATION.*

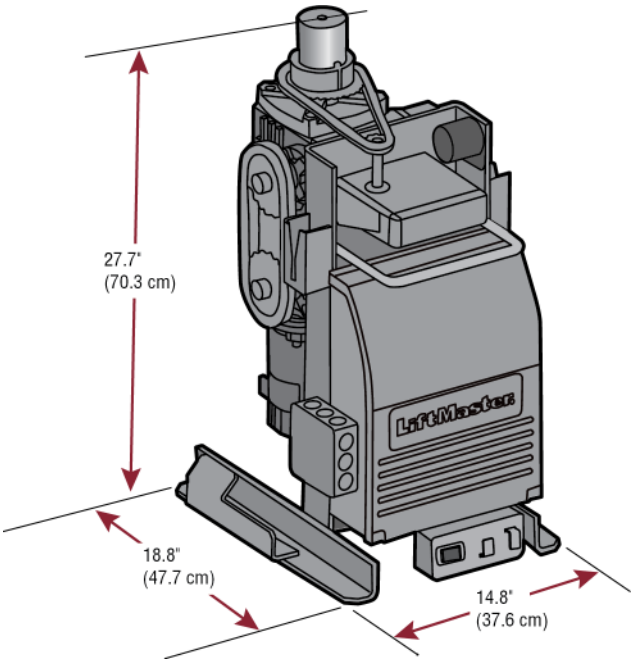

Site Preparation

Check the national and local building codes **BEFORE** installation.

Gate

Gate must be constructed and installed according to ASTM F2200 standards (refer to page 4). Gate must fit specifications of operator (refer to specifications).

Conduit and Concrete Pad

Trench and install conduit. Before trenching, contact underground utility locating companies. Conduit must be UL approved for low and high voltage. Consider the operator placement BEFORE installing the pad or post.

Safety

Entrapment protection devices are required to protect against any entrapment or safety conditions encountered in your gate application. Install a warning sign (two provided) on the inside and outside of the property, where easily visible.

Additional Accessories

The vehicle loops allow the gate to stay open when vehicles are obstructing the gate path. Suggested for vehicles 14 feet (4.27 m) or longer. Vehicle loops are not required but are recommended. Before installing your Access Control Device(s) be sure to complete a site survey and determine the best device for your site needs.

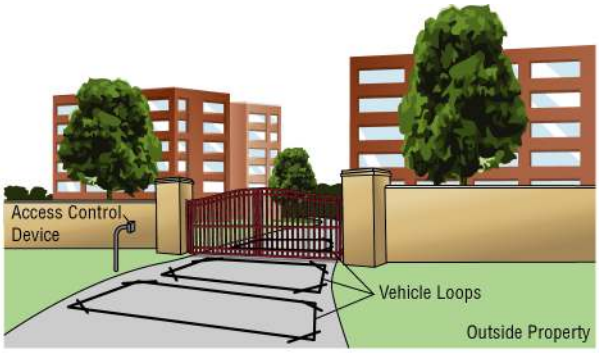

Check your gate

Gate MUST be level. Gate and gate post MUST be plumb. Gate MUST have a smooth bottom edge, no protrusions should exist.

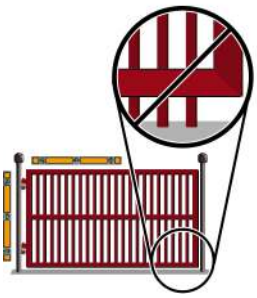

Remove ANY/ALL wheels from the bottom of gate.

Gate MUST NOT hit or drag across ground

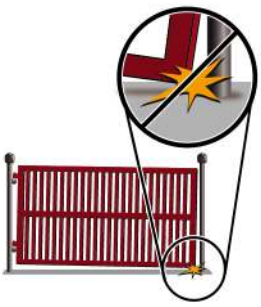

Gate MUST swing freely and be supported entirely by its hinges.

Types of Installations

Standard Installation

The illustration is an example of a standard installation.

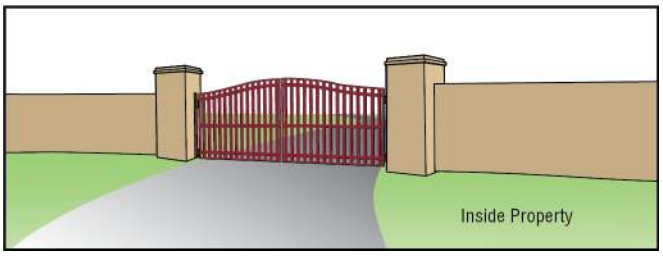

Compact Installation

The illustration is an example of a compact installation. If the operator arm will hit an obstruction when the gate is in the open position, refer to LiftMaster.com for compact installation instructions. **Entrapment protection devices must be employed in this area.**

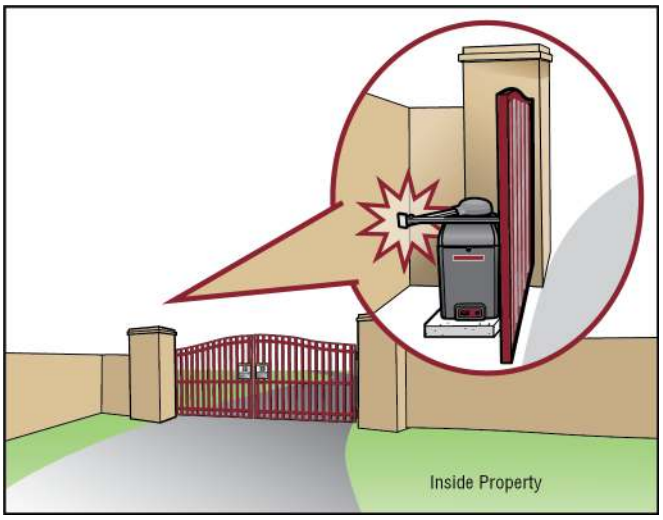

INSTALLATION

⚠ CAUTION

- To AVOID damaging gas, power or other underground utility lines, contact underground utility locating companies BEFORE digging more than 18 inches (46 cm) deep.
- ALWAYS wear protective gloves and eye protection when changing the battery or working around the battery compartment.

Step 1 Determine Location for Concrete Pad and Operator

DO NOT run the operator until instructed.

The illustration below shows the recommended dimensions for a standard installation. If these dimensions are not applicable for your installation refer to the chart on the following page for alternate dimensions.

Standard Installation

Refer to the illustration to determine the measurements and location of the concrete pad.

NOTE: *There should only be a maximum of 4" (10.2 cm) from the center of the hinge to the edge of the post or column. If the distance is greater than 4" (10.2 cm) entrapment protection for this area is required.*

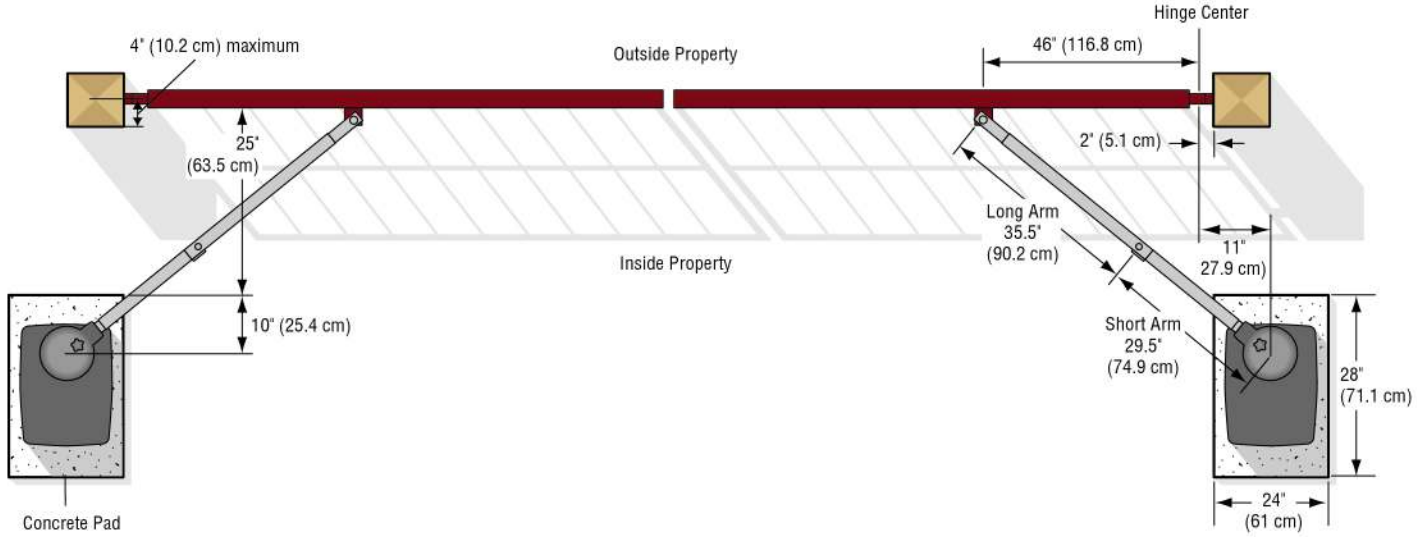

Chart Installation

Refer to the illustration to determine the measurements and location of the concrete pad.

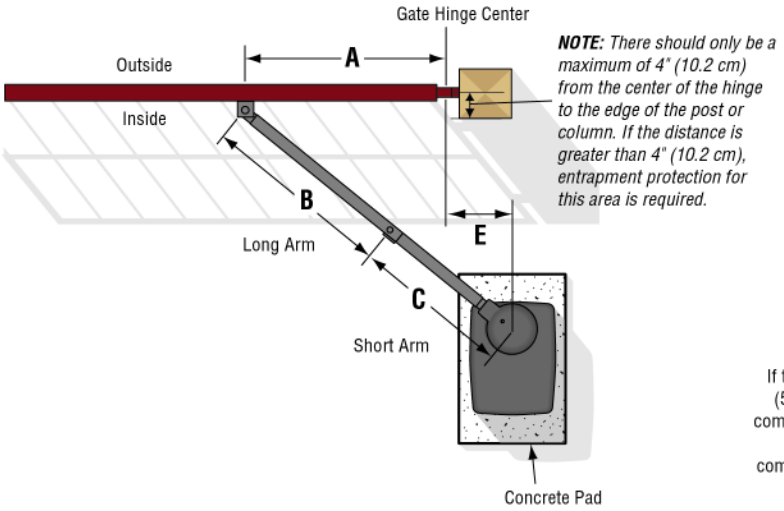

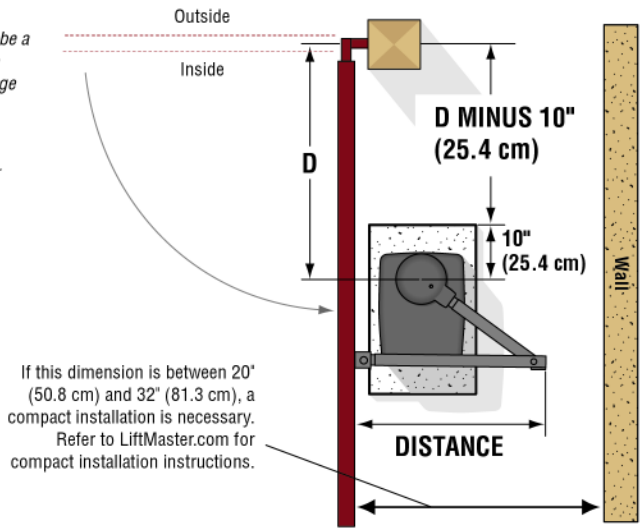

Dimension (**A**) thru (**E**) are from the center of one pivot point to the center of another pivot point.

Caution: If the gate is longer than 18 feet (5.5 m), follow **CHART A: A-2**.

Suggestion: The dimensions between the gate and the concrete pad is always 10 inches (25.4 cm) less than the dimension D.

Example: D = 42" (106.7 cm), if the dimensions between the gate and the concrete pad is 32" (81.3 cm).

Chart A

	A	B	C	D	E	DISTANCE
1	46" (116.8 cm)	35.5" (90.2 cm)	29.5" (74.9 cm)	35" (90.2 cm)	11" (27.9 cm)	45" (114.3 cm)
2	46.8" (118.8 cm)	35.5" (90.2 cm)	33.5" (85.1 cm)	42" (106.7 cm)	11" (27.9 cm)	37" (94 cm)
3	46.8" (118.8 cm)	37" (94 cm)	31.5" (80 cm)	40" (101.6 cm)	11" (27.9 cm)	41" (104.1 cm)
4	47.3" (120 cm)	37.3" (94.6 cm)	30" (76.2 cm)	37" (94 cm)	11" (27.9 cm)	45" (114.3 cm)
5	47" (119.4 cm)	35" (90.2 cm)	29.5" (74.9 cm)	32" (81.3 cm)	11" (27.9 cm)	45" (114.3 cm)
6	42.5" (108 cm)	33" (116.8 cm)	26.5" (67.3 cm)	28.5" (72.4 cm)	11" (27.9 cm)	41" (104.1 cm)

Chart B

	A	B	C	D	E	DISTANCE
1	34.5" (87.6 cm)	34.8" (88.3 cm)	29.5" (74.9 cm)	35" (90.2 cm)	14" (35.6 cm)	43" (109.2 cm)
2	44" (111.8 cm)	36.5" (92.7 cm)	32.5" (82.6 cm)	42" (106.7 cm)	14" (35.6 cm)	32" (81.3 cm)
3	44" (111.8 cm)	37" (94 cm)	30.5" (77.5 cm)	40" (101.6 cm)	14" (35.6 cm)	40" (101.6 cm)
4	45" (114.3 cm)	37" (94 cm)	30.5" (77.5 cm)	37" (94 cm)	14" (35.6 cm)	43" (109.2 cm)
5	44.8" (113.7 cm)	35.8" (90.8 cm)	29.5" (74.9 cm)	32" (81.3 cm)	14" (35.6 cm)	44" (111.8 cm)
6	41" (104.1 cm)	39" (99.1 cm)	27.5" (69.9 cm)	28.5" (72.4 cm)	14" (35.6 cm)	41" (104.1 cm)

Step 2 Concrete Pad and Operator Attachment

CHECK the national and local building codes before installation.

NOTE: *When lifting the operator use the handle to avoid damaging the operator*

1. Install the electrical conduit.
2. Pour a concrete pad (reinforced concrete is recommended). The concrete pad should be 6 inches (15.2 cm) above the ground and deeper than the frost line. Ensure the pad is tall enough to avoid possible flooding.
3. Secure the operator to the concrete pad with appropriate fasteners.

NOTE: *An alternative to a concrete pad is to post mount the operator, see Accessories.*

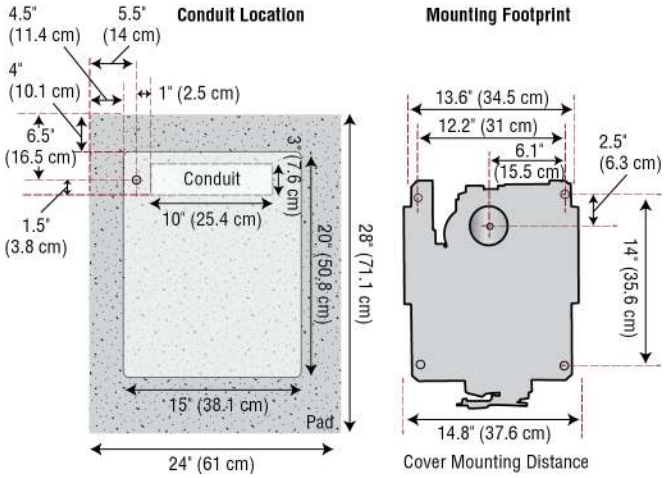

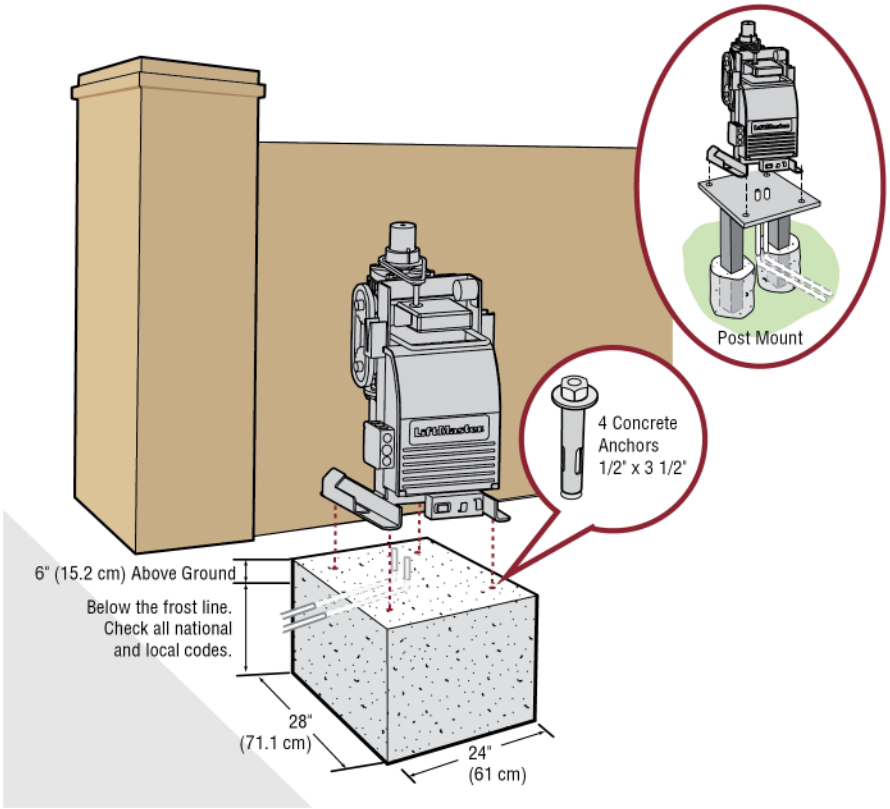

Step 3 Position the Gate Bracket

NOTE: *It may be necessary to attach horizontal reinforcement to the gate before attaching the gate bracket.*

1. Position the operator arm onto the output shaft so that the pin slides into the slot.
2. Measure 46" (116.8 cm) along the gate length from the gate hinge center.
3. Measure 27.5" (69.9 cm) up from the concrete pad to the gate hinge position on the gate as shown.
4. Make sure the operator arm is level and tack weld the gate bracket in this position. Use the set screws on the arm to temporarily hold the arm in place while determining the correct measurements.

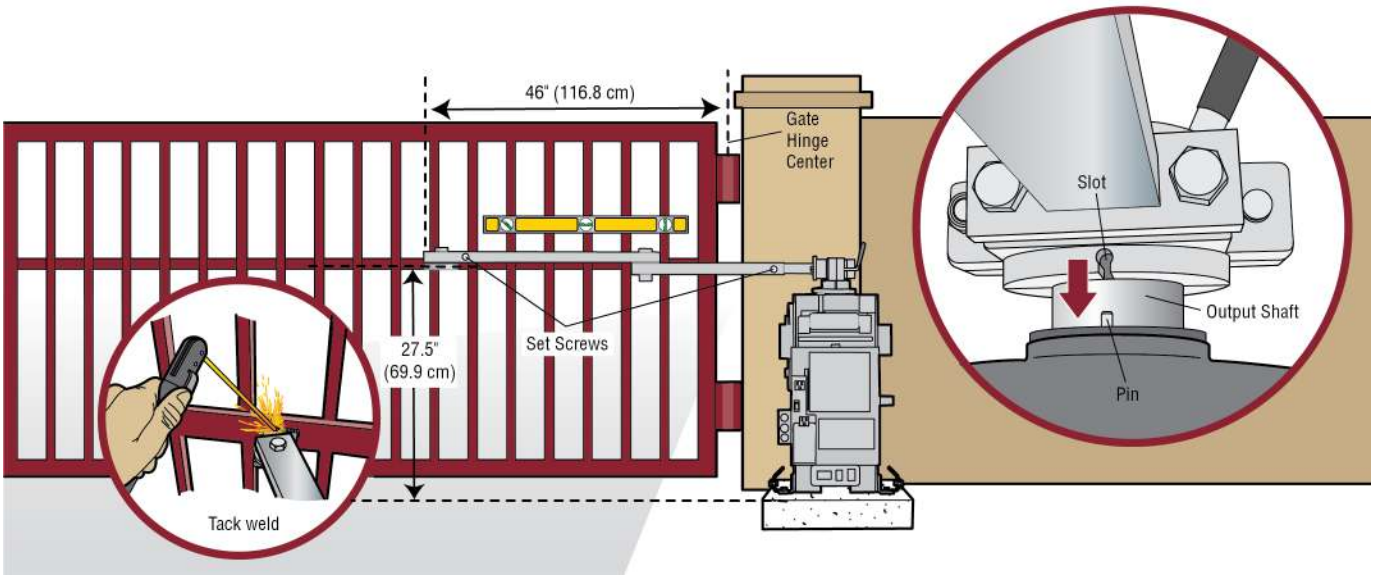

Step 4 Adjust the Operator Arm Length

NOTE: *The length of the arm can be adjusted if necessary. If adjusting the length, ensure that both sections of the arm are adjusted proportionally. Use the set screws on the arm to temporarily hold the arm in place while determining the correct measurements.*

1. Close the gate and measure the distance of the operator arm from the gate bracket to the output shaft center. This distance is E.
2. Open the gate 90° (do not allow arms to scissor when open). Measure both sections of the arm (D and C). The arm lengths are correct as long as C+D=E (arm should be perpendicular to the gate in the open position as shown).

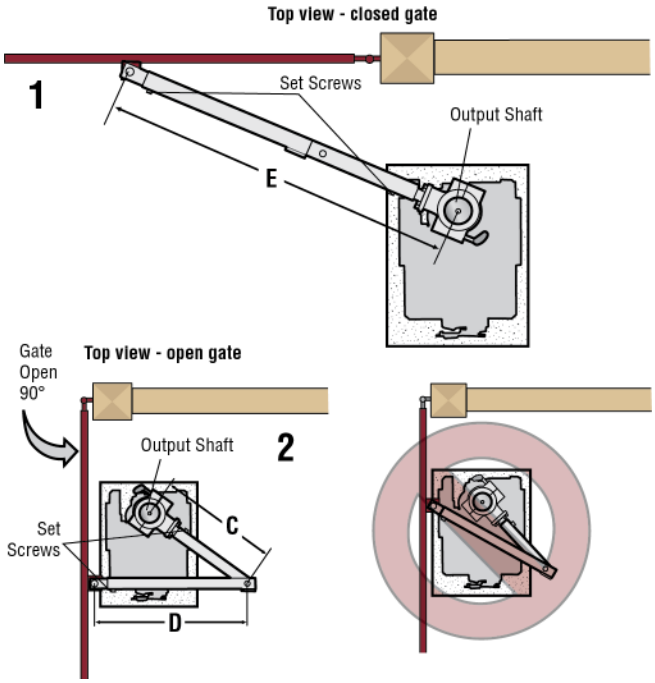

Step 5 Secure the Operator Arm

Once the operator arm measurements are verified:

1. Weld the gate bracket to the gate.
2. Weld the short arm section.
3. Weld the long arm section.
4. Remove the set screws from the arm. ***NOTE:*** *Completely weld around the outer tubing and bracket.*
5. Adjust the nuts on the operator arm so the operator arm fits snug on the output shaft yet still allows enough room to swivel (the handle must be in a 90° position).
6. Tighten the handle by pushing it down. Test to make sure the operator arm does not slip on the output shaft.
7. Remove the pin from the vent plug on both the top and bottom gear boxes.

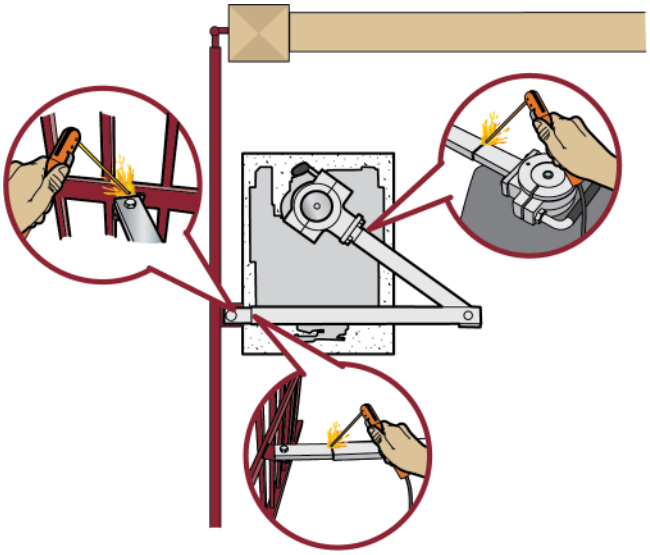

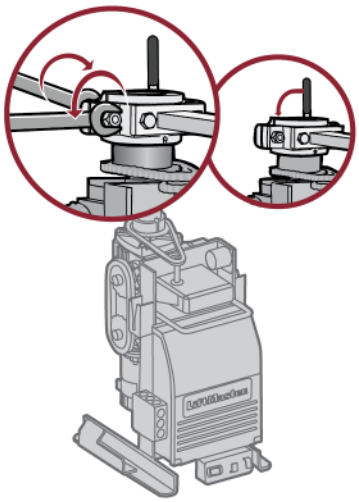

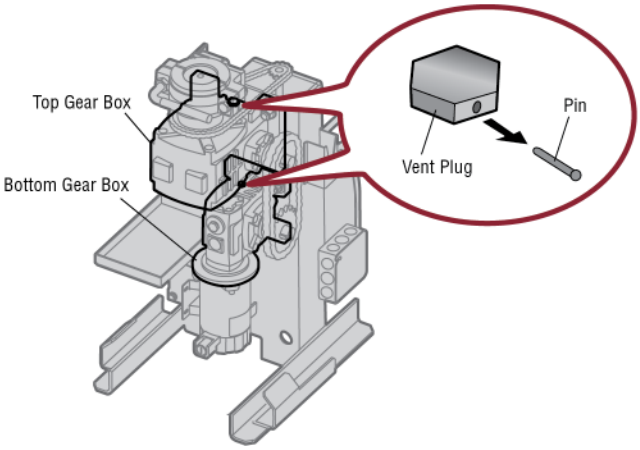

⚠ WARNING

To prevent SERIOUS INJURY or DEATH from a moving gate:

- ALL gate operator systems REQUIRE two independent entrapment protection systems for each entrapment zone.
- Entrapment protection devices MUST be installed to protect anyone who may come near a moving gate.
- Locate entrapment protection devices to protect in BOTH the open and close gate cycles.
- Locate entrapment protection devices to protect between moving gate and RIGID objects, such as posts, walls, pillars, columns, or operator itself.

Step 6 Install Entrapment Protection

Entrapment protection MUST be installed according to the following UL 325 requirements:

- Swing gate operators require the installation of the first external monitored entrapment protection device to function.
- Every installation is unique. It is the responsibility of the installer to ensure that ALL entrapment zones are protected with an external monitored entrapment protection device, protecting both the open and close gate cycles.
- **LiftMaster monitored external entrapment protection devices MUST be used with LiftMaster operators to meet UL325 requirements, see *Accessories*.**
- Test ALL entrapment protection devices after completing installation of the operator. For testing instructions, refer to the manual provided with your entrapment protection device.

Definitions

ENTRAPMENT: The condition when a person is caught or held in a position that increases the risk of injury.

SWING GATE ENTRAPMENT ZONE: Locations between a moving gate or moving, exposed operator components and a counter opposing edge or surface where entrapment is possible up to 1.8 m (6 ft) above grade. Such locations occur if during any point in travel:

a. The gap between the bottom of a moving gate and the ground is greater than 101.6 mm (4 in) and less than 406 mm (16 in); or

b. The distance between the center line of the pivot and the end of the wall, pillar, or column to which it is mounted when in the open or closed position exceeds 101.6 mm (4 in). Any other gap between a moving gate and fixed counter opposing edges or surfaces or other fixed objects is less than 406 mm (16 in) (examples are walls, curbs, berms or other immovable objects).

Illustrations provided by DASMA Gate Systems Safety Guide

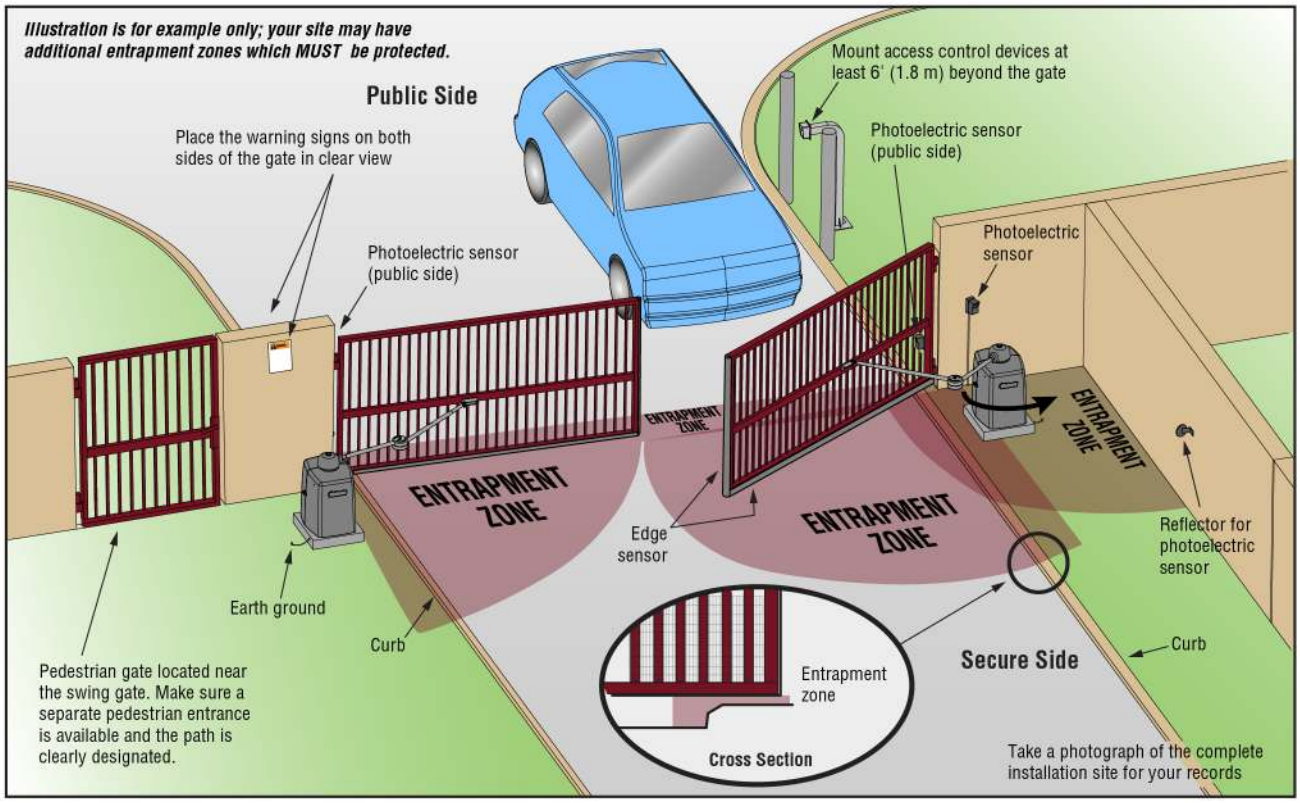

Wire Entrapment Protection Devices

There are three options for wiring the entrapment protection devices depending on the specific device and how the device will function. Refer to the specific entrapment protection device manual for more information. These entrapment protection device inputs are for monitored devices, which include pulsed photoelectric sensors, resistive edge sensors, and pulsed edge sensors. **Only one monitored entrapment protection device may be wired to each input.** Additional entrapment protection devices may be wired to the expansion board.

Control Board

CLOSES EYES/INTERRUPT

(2 Terminals) The CLOSE EYES/INTERRUPT input is for photoelectric sensor entrapment protection for the close direction. When an obstruction is sensed during gate closing the gate will open to the full open position and resets the Timer-to-Close. This input will be disregarded during gate opening.

CLOSE EDGE

(2 Terminals) The CLOSE EDGE input is for edge sensor entrapment protection for the close direction. When an obstruction is sensed during gate closing the gate will reverse to the full open position, disengaging the Timer-to-Close. This input will be disregarded during gate opening.

OPEN EYES/EDGE

(2 Terminals) The OPEN EYES/EDGE input is for photoelectric sensor or edge sensor entrapment protection for the open direction. When an obstruction is sensed during gate opening the gate will reverse for 4 seconds then stop. This input will be disregarded during gate closing.

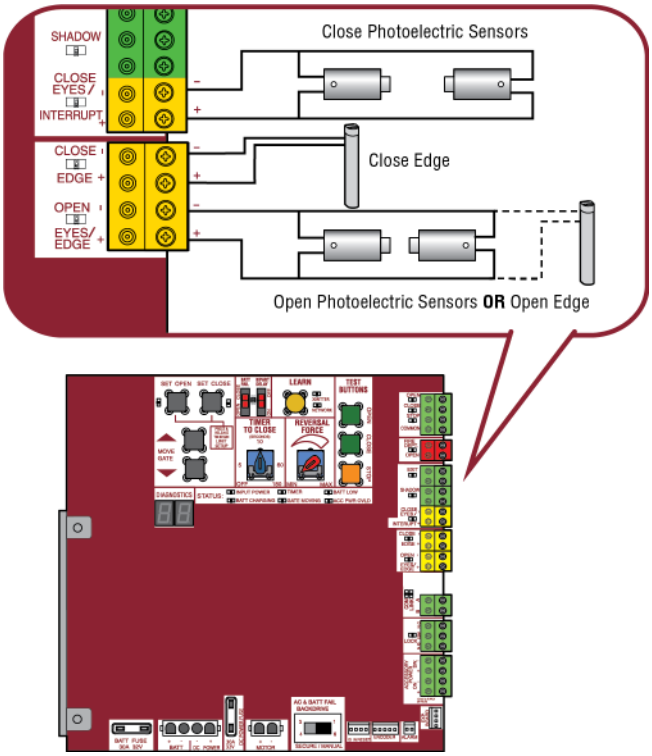

Expansion Board

EYE ONLY and COM

Open or Close Direction Photoelectric Sensors, the functionality is based on the switch settings (located next to the terminals)

Switch set to CLOSE: gate reverses fully when an obstruction is sensed

Switch set to OPEN: gate reverses 4 seconds when an obstruction is sensed

EYE/EDGE and COM

Open or Close Direction Photoelectric Sensors or Edge Sensor, the functionality is based on the switch settings (located next to the terminals)

Switch set to CLOSE: gate reverses fully when an obstruction is sensed

Switch set to OPEN: gate reverses 4 seconds when an obstruction is sensed

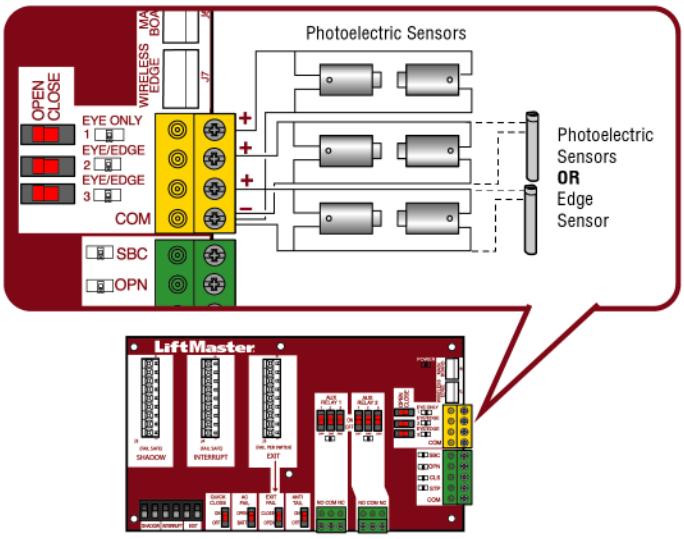

Step 7 Earth Ground Rod

Use the proper earth ground rod for your local area. The ground wire must be a single, whole piece of wire. Never splice two wires for the ground wire. If you should cut the ground wire too short, break it, or destroy its integrity, replace it with a single wire length.

1. Install the earth ground rod within 3 feet (.9 m) of the operator.
2. Run wire from the earth ground rod to the operator.

NOTE: *If the operator is not grounded properly the range of the remote controls will be reduced and the operator will be more susceptible to lightning and surge damage.*

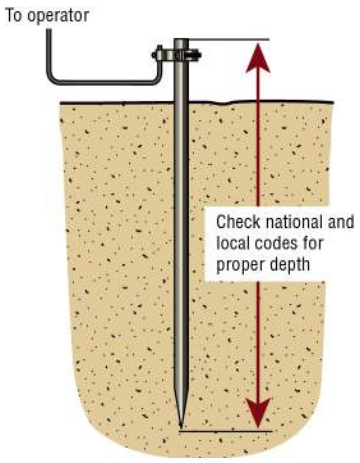

Step 8 Power Wiring

⚠ ⚠ WARNING

To reduce the risk of SEVERE INJURY or DEATH:

- ANY maintenance to the operator or in the area near the operator MUST NOT be performed until disconnecting the electrical power (AC or solar and battery) and locking-out the power via the operator power switch. Upon completion of maintenance the area MUST be cleared and secured, at that time the unit may be returned to service.
- Disconnect power at the fuse box BEFORE proceeding. Operator MUST be properly grounded and connected in accordance with national and local electrical codes. ***NOTE:*** *The operator should be on a separate fused line of adequate capacity.*
- ALL electrical connections MUST be made by a qualified individual.
- DO NOT install ANY wiring or attempt to run the operator without consulting the wiring diagram.
- ALL power wiring should be on a dedicated circuit and well protected. The location of the power disconnect should be visible and clearly labeled.
- ALL power and control wiring MUST be run in separate conduit.

The operator can be wired for either 120 Vac or 240 Vac or a solar panel (not provided). Follow the directions according to your application. An optional Transformer Kit (Model 3PHCONV) can be used to change the input voltage (208/240/480/575 Vac) to an output voltage of 120 Vac (refer to Accessories). For dual gate applications, power will have to be connected to each operator. Main power supply and control wiring MUST be run in separate conduits.

SOLAR APPLICATIONS: For solar applications refer to *Solar Panels* section in the Appendix. Follow the directions according to your application.

NOTE: *If using an external receiver use shielded wire for the connections and mount the receiver away from the operator to avoid interference from the operator.*

MAXIMUM WIRE LENGTH							
AMERICAN WIRE GAUGE (AWG)	STANDARD OPERATOR			OPERATOR + ACCESSORIES POWERED BY TRANSFORMER KIT			
	120 VAC, 10A (includes fully loaded outlets)	120 VAC, 4A	240 VAC, 2A	208 VAC, 4.8A	240 VAC, 4.2A	480 VAC, 2.1A	575 VAC, 1.7A
14	100 (30.5 m)	250 (76.2 m)	1,000 (304.8 m)	360 (109.7 m)	480 (146.3 m)	1,900 (579.1 m)	2,800 (853.4 m)
12	160 (48.8 m)	400 (121.9 m)	1,600 (487.7 m)	570 (173.7 m)	750 (228.6 m)	3,000 (914.4 m)	4,500 (1,371.6 m)
10	250 (76.2 m)	630 (192 m)	2,500 (762 m)	900 (274.3 m)	1,200 (365.8 m)	4,800 (1,463 m)	7,100 (2,164.1 m)
8	400 (121.9 m)	1,000 (304.8 m)	4,000 (1,219.2 m)	1,400 (426.7 m)	1,900 (579.1 m)	7,600 (2,316.5 m)	11,300 (3,444.2 m)
6	636 (193.9 m)	1,600 (487.7 m)	6,400 (1950.7 m)	2,300 (701 m)	3,000 (914.4 m)	12,100 (3,688.1 m)	18,000 (5,486.4 m)
4	1,000 (304.8 m)	2,500 (762 m)	10,100 (3,078.5 m)	3,700 (1,127.8 m)	4,800 (1,463 m)	19,300 (5,882.6 m)	28,500 (8,686.8 m)
Chart assumes: copper wire, 65°C, 5% drop							

All control wiring used to connect external devices to Class 2 circuits of the operator must be (QPTZ) Power-Limited Circuit Cables, Type CL2, CL2P, CL2R, or CL2X or other cable with equivalent or better electrical, mechanical, and flammability ratings.

240 VAC only

The accessory outlet is disabled and cannot be used with the 240 Vac option.

1. Remove the outlet housing from the electrical box by removing the screws (2).
2. Pull the outlet housing out and locate the power wiring connector on the EMI board.
3. Unplug the power wiring connector from the 120 Vac socket (factory default location) and plug it into the 240 Vac socket.
4. Replace the outlet housing by securing with the screws. The operator is now set for 240 Vac operation.

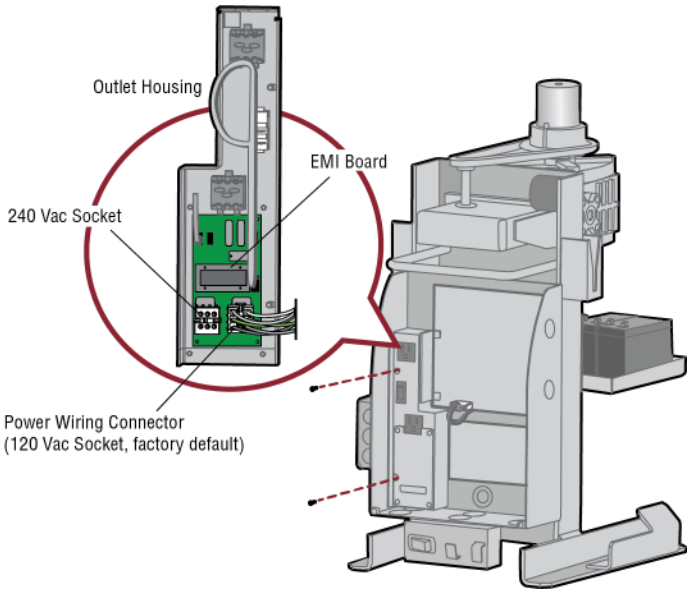

120 VAC and 240 VAC

1. Turn off the AC power from the main power source circuit breaker.
2. Run the AC power wires to the operator.
3. Remove the junction box cover.
4. Connect the green wire to the earth ground rod and AC ground using a wire nut. ***NOTE:*** *The earth ground rod can be grounded to the chassis.*
5. Connect the white wire to NEUTRAL using a wire nut.
6. Connect the black wire to HOT using a wire nut.
7. Replace the junction box cover. Ensure the wires are not pinched.

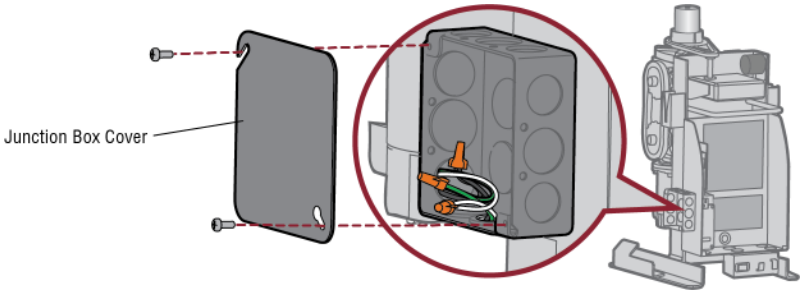

AC power switch

The AC Power switch on the operator will turn the incoming 120/240 Vac power ON or OFF. The operator's AC Power switch ONLY turns off AC power to the control board and DOES NOT turn off battery power.

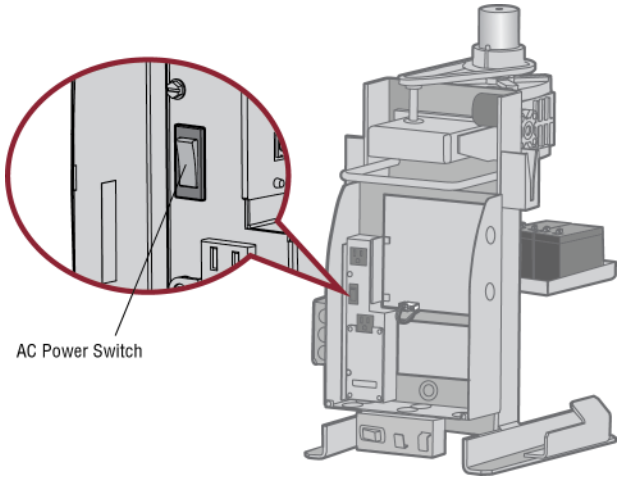

Step 9 Connect Batteries

7AH battery

The batteries are charged in the circuit by the integrated transformer. The batteries are for battery backup.

1. Turn OFF AC power to the operator.
2. Unplug the J15 plug labeled BATT on the control board by squeezing the plug and pulling it from the control board. This disconnects the ac/dc power to the control board.
3. Connect a jumper between the positive (+) terminal of one battery to the negative terminal (-) of the other battery.
4. Connect the red wire from the J15 plug to the positive (+) terminal of the battery.
5. Connect the black wire from the J15 plug to the negative (-) terminal of the battery.
6. Plug the J15 plug back into the control board. This will power up the control board. ***NOTE:*** *You may see a small spark when plugging the J15 plug into the board.*
7. Turn ON AC power to the operator.
8. Turn ON the AC power switch on the operator.

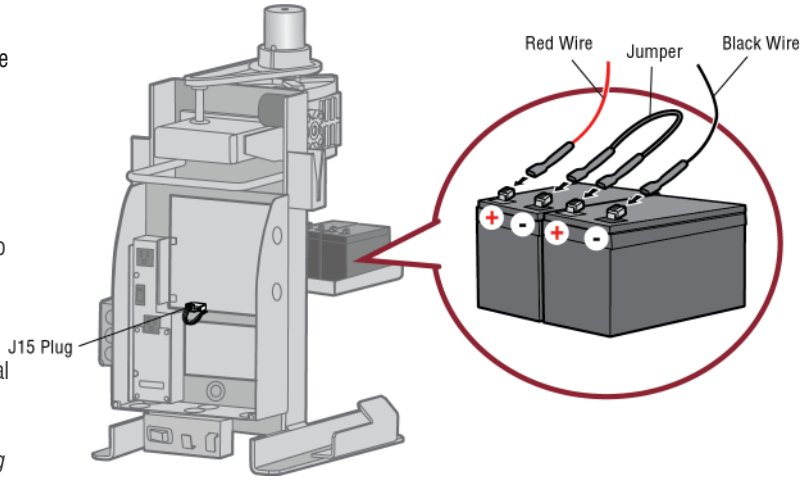

33AH battery

The batteries are charged in the circuit by the integrated transformer. The batteries are for battery backup or solar installation. The 33AH application requires the Solar Harness Kit (Model K94-37236) and an additional battery tray (Model K10-34758-2).

1. Locate the J15 plug on the control board and disconnect it.
2. Connect the white jumper from the Solar Harness Kit between the positive (+) terminal of one battery and the negative (-) terminal of the other battery.
3. Connect one end of the red (+) wire from the Solar Harness Kit to the red wire from the J15 plug as shown. Connect the other end of the red (+) wire to the positive (+) terminal on the battery as shown.
4. Connect one end of the black (-) wire from the Solar Harness Kit to the black wire from the J15 plug as shown. Connect the other end of the black (-) wire to the negative (-) terminal on the battery as shown.
5. Turn ON AC power to the operator.
6. Turn ON the AC power switch on the operator.
7. Reconnect the J15 plug to the control board. ***NOTE:*** *You may see a small spark when plugging the J15 plug into the board.*

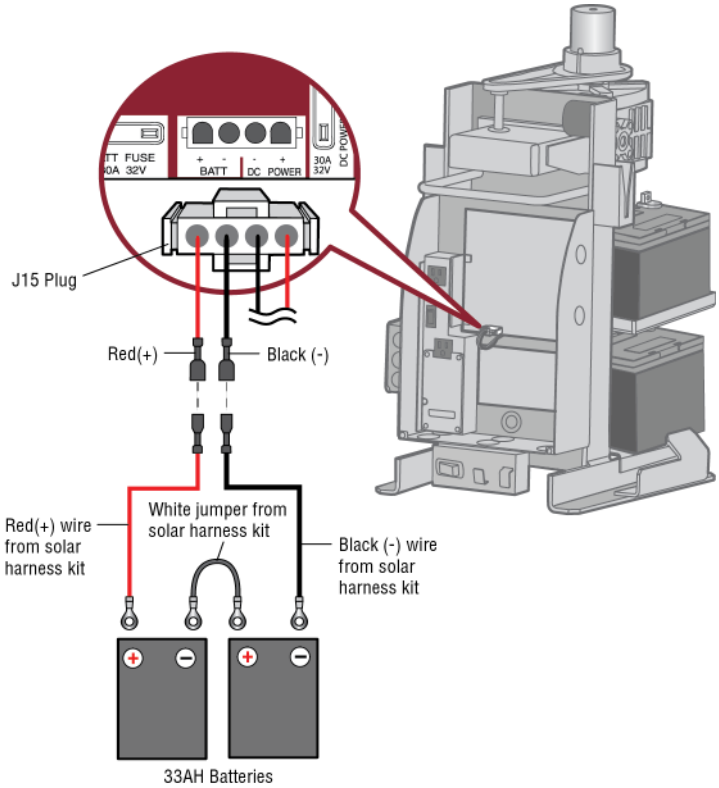

Step 10 Dual gate setup

There are two options for dual gate communication: wired or wireless. Follow the directions according to your application. Do not use wired and wireless communication simultaneously. Wired dual gate applications will have a longer battery standby time than wireless applications.

Wireless setup

To activate the wireless feature:

1. Choose an operator to be the network primary operator. All wireless accessories will need to be programmed to the primary operator. ***NOTE:*** *We recommend that all accessories and board configurations are set on the primary operator.*
2. Press and release the LEARN button on the primary operator. The green XMITTER LED will light. ***NOTE:*** *The operator will time out of programming mode after 180 seconds.*
3. Press and release the LEARN button again on the primary operator. The yellow NETWORK LED will light.
4. Press and release the OPEN test button to assign this operator as network primary.
5. Press and release the LEARN button on the second operator. The green XMITTER LED will light.
6. Press and release the LEARN button again on the second operator. The yellow NETWORK LED will light.
7. Press and release the CLOSE test button to assign this operator as network second.

Both operators will beep and the yellow NETWORK LEDs will turn off indicating programming is successful.

To deactivate the wireless feature:

1. Press and release the LEARN button on either operator. The green XMITTER LED will light.
2. Press and release the LEARN button again on the same operator. The yellow NETWORK LED will light.
3. Press and hold the LEARN button for 5 seconds. The yellow NETWORK LED will blink (operator will beep) then turn off indicating successful deactivation.
4. Repeat the steps for the other operator.

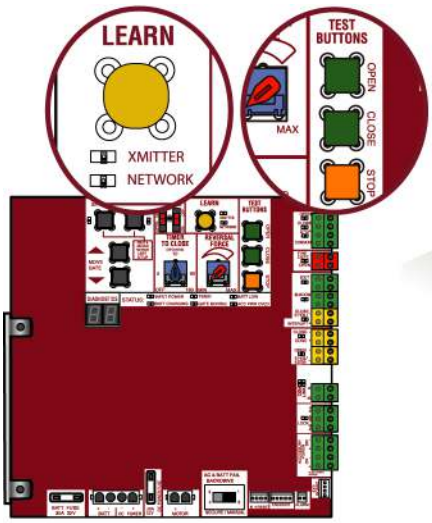

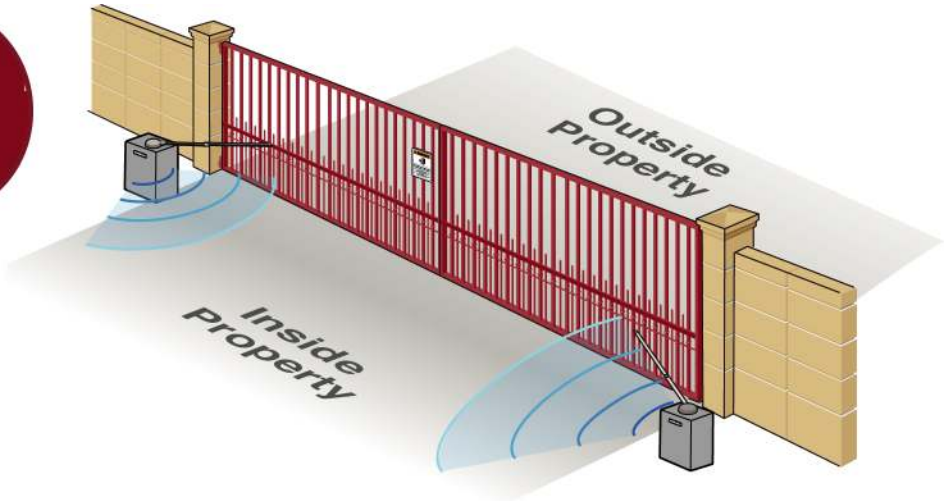

Wired setup

Before digging, contact local underground utility locating companies. Use PVC conduit to prevent damage to cables.

1. **Disconnect ALL power to the operator and unplug the J15 plug from the control board.**
2. Trench across driveway to bury the shielded twisted pair cable.
3. Connect the wires from the shielded twisted pair cable to the Com Link terminals on the primary gate operator control board. ***NOTE:*** *We recommend that all accessories and board configurations are set on the primary operator.*
4. Route the shielded twisted pair cable to the secondary gate operator's control board.
5. Connect the wires from the shielded twisted pair cable to the Com Link terminals on the secondary control board (Com Link A to Com Link A and Com Link B to Com Link B). Ground the shield of the cable to the chassis ground of one operator.
6. **Connect ALL power to the operator and plug the J15 plug into the control board.**

DUAL GATE WIRE TYPE (SHIELDED TWISTED PAIR CABLE)	
22AWG up to 200 feet (61 m)	18AWG - 200-1000 feet (61-305 m)
Wire must be rated at 30 Volt minimum	

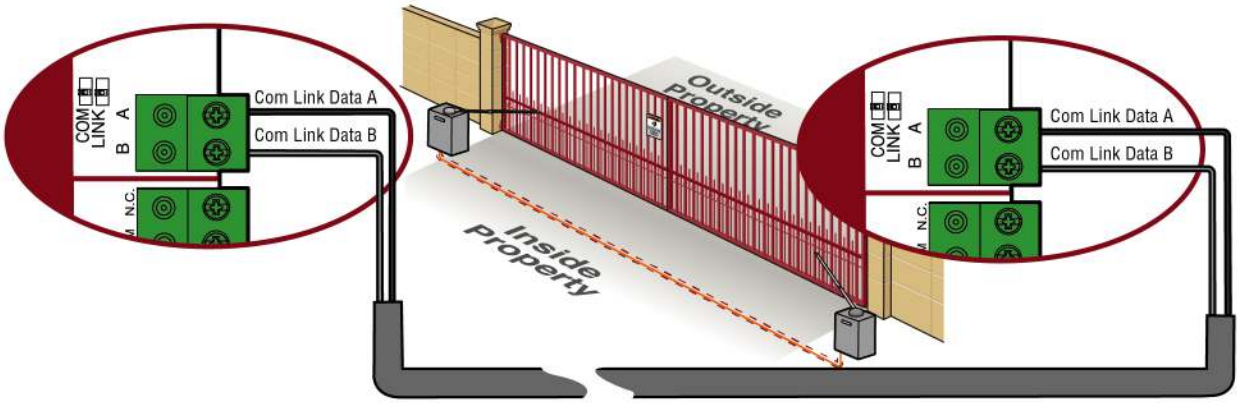

Bipart delay/synchronized close

The LOCK/BIPART DELAY switch is used only with dual gate applications and serves two functions:

- **BIPART DELAY**
  SWING GATE APPLICATIONS: The BIPART DELAY is used in applications where a mag-lock, solenoid lock, or decorative overlay would require one gate to close before the other. The operator with the LOCK/BIPART DELAY switch ON will delay from the close limit when opening and be the first to close from the open limit.
  SLIDE GATE APPLICATIONS: Not applicable, set to OFF.
- **SYNCHRONIZED CLOSE**
  The BIPART DELAY is also used in applications where one gate travels a longer distance than the other. To synchronize the closing of the gates, set the LOCK/BIPART DELAY switch to ON for both operators.

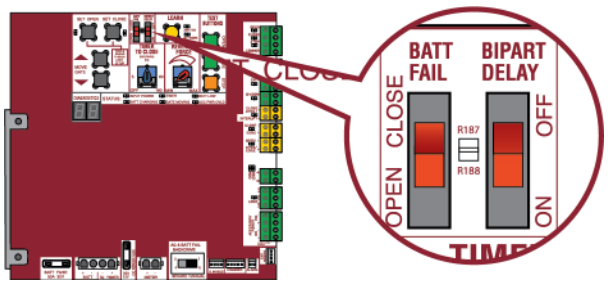

Step 11 Install the cover

Before installing the cover, follow the instructions in the Adjustment section to adjust the limits and force.

The operator cover consists of two pieces: a rear cover and a front cover. The front cover can easily be removed to access the electrical box. To access the reset switch slide the access door up. The front cover and access door can be locked with the key.

1. Remove the operator arm from the output shaft by releasing the handle.
2. Align the tabs on the rear cover with the slots on the chassis and place the cover over the operator.
3. Secure both sides of the rear cover to the chassis with two 5/16-18 lead in screws.
4. Reattach the operator arm to the output shaft (making sure the pin fits into the slot) and secure by pushing the handle down.
5. Place the operator arm cover over the operator arm and secure.
6. Align the front cover with the back cover, making sure the grooves line up.
7. Secure the front cover to the chassis with two 5/16-18 lead in screws.
8. Secure the front cover to the rear cover using the 5/16-18 lead in screw.

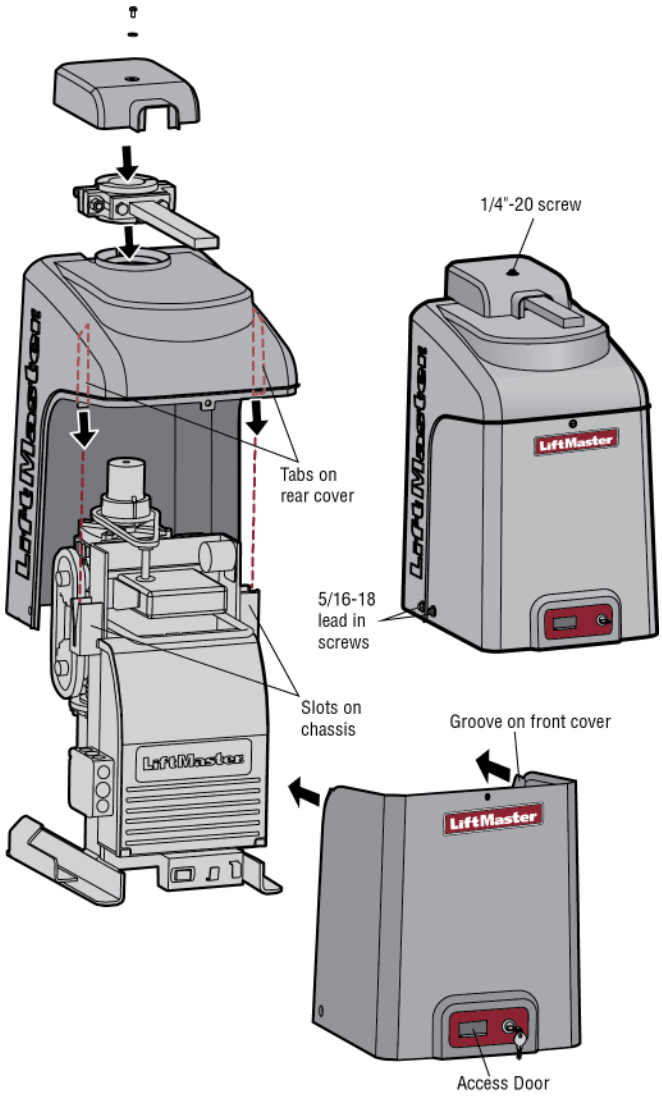

To Lock the Access Door

From the factory the access door for the reset switch will not be locked. To lock the access door follow the steps below:

1. Locate the lock tab on the back of the front cover and remove the screw securing the tab to the cover.
2. Turn the tab 180 degrees, then secure with the screw. The access door can now be locked.

The basic installation is complete.

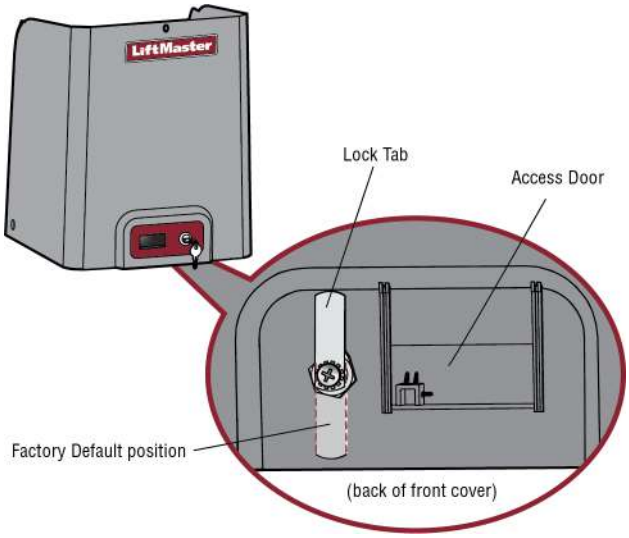

Limit and Force Adjustment

⚠ WARNING

To reduce the risk of SEVERE INJURY or DEATH:

- Without a properly installed safety reversal system, persons (particularly small children) could be SERIOUSLY INJURED or KILLED by a moving gate.
- Too much force on gate will interfere with proper operation of safety reversal system.
- NEVER increase force beyond minimum amount required to move gate.
- NEVER use force adjustments to compensate for a binding or sticking gate.
- If one control (force or travel limits) is adjusted, the other control may also need adjustment.
- After ANY adjustments are made, the safety reversal system MUST be tested. Gate MUST reverse on contact with an object.

Introduction

Your operator is designed with electronic controls to make travel limit and force adjustments easy. The adjustments allow you to program where the gate will stop in the open and close position. The electronic controls sense the amount of force required to open and close the gate. The force is adjusted automatically when you program the limits but should be fine tuned using the REVERSAL FORCE dial on the control board (refer to *Fine Tune the Force* section) to compensate for environmental changes. The limit setup LEDs (located next to the SET OPEN and SET CLOSE buttons) indicate the status of the limits, refer to the table to the right.

The limits can be set using the control board (below) or a remote control (refer to *Limit Setup with a Remote Control* in the Appendix). Setting the limits with a remote control requires a 3-button remote control programmed to OPEN, CLOSE, and STOP.

NOTE: *The TEST buttons on the control board will not work until the limits have been set and the required entrapment protection devices are installed.*

LIMIT SETUP LEDS			
SET OPEN LED	SET CLOSE LED	OPERATOR MODE	EXPLANATION
OFF	OFF	NORMAL MODE	Limits are set
BLINKING	BLINKING	LIMIT SETTING MODE	Limits are not set
BLINKING	ON	LIMIT SETTING MODE	Open limit is not set
ON	BLINKING	LIMIT SETTING MODE	Close limit is not set
ON	ON	LIMIT SETTING MODE	Limits are set

Initial Limits and Force Adjustment

For dual gate applications the limits will have to be set for each operator. The gate MUST be attached to the operator before setting the limits and force.

1. Press and release the SET OPEN and SET CLOSE buttons simultaneously to enter limit setting mode.
2. Press and hold one of the MOVE GATE buttons to move the gate to the open or close limit.
3. Press and release the SET CLOSE or SET OPEN button depending on which limit is being set.
4. Press and hold one of the MOVE GATE button to move the gate to the other limit.
5. Press and release the SET CLOSE or SET OPEN button depending on which limit is being set.
6. Cycle the gate open and close. This automatically sets the force.

When limits are set properly the operator will automatically exit limit setting mode.

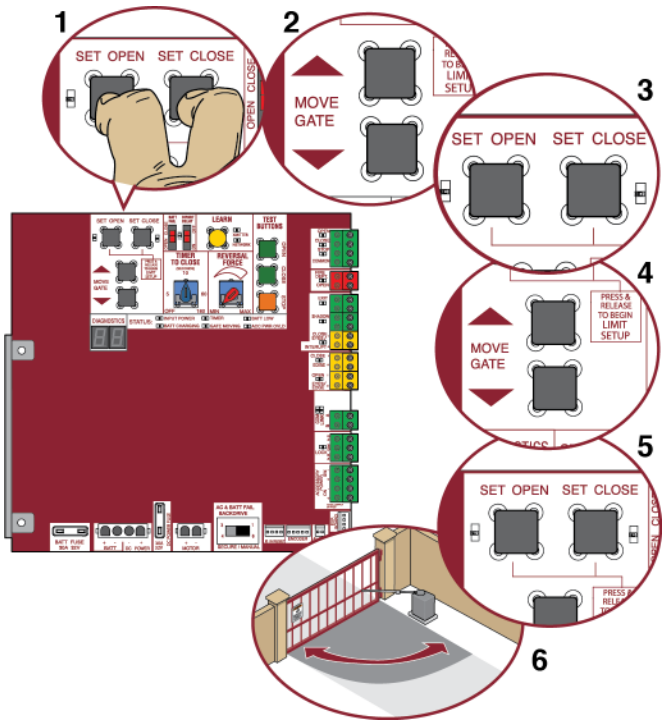

Fine Tune the Force

Once the initial limits have been set, the REVERSAL FORCE DIAL on the control board is used for fine tuning the force where wind or environmental changes may affect the gate travel. The REVERSAL FORCE DIAL is set to minimum at the factory.

Based on the length and weight of the gate it may be necessary to make additional force adjustments. The force setting should be high enough that the gate will not reverse by itself nor cause nuisance interruptions, but low enough to prevent serious injury to a person. The force setting is the same for both the open and close gate directions.

1. Open and close the gate with the TEST BUTTONS.
2. If the gate stops or reverses before reaching the fully open or closed position, increase the force by turning the force control slightly clockwise.
3. Perform the "Obstruction Test" after every limit and force setting adjustment (see below).

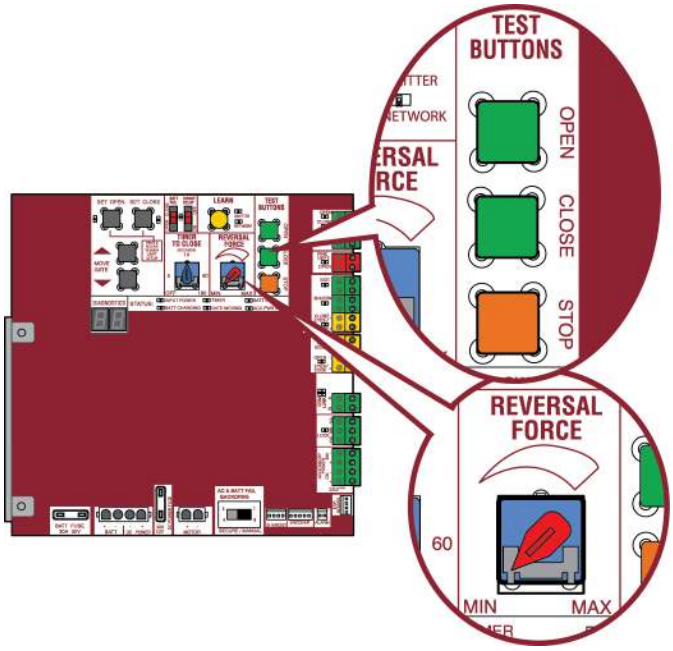

Adjust the Limits

After both limits are set and the operator is ready to run, one limit can be adjusted independently from the other by following steps 1-3 of the Initial Limit and Force Adjustment section.

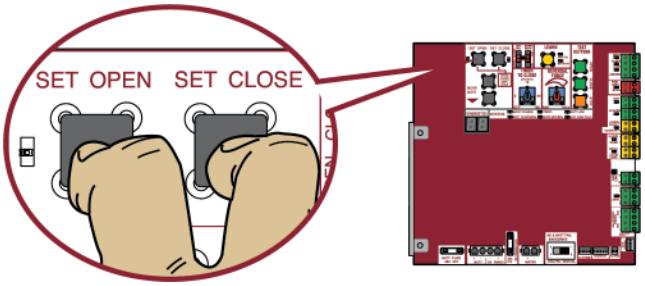

Obstruction Test

The operator is equipped with an inherent (built in to the operator) obstruction sensing device. If the gate encounters an obstruction during motion, the operator will reverse direction of the gate and then stop. The following procedure will test ONLY the inherent (built in to the operator) obstruction sensing device:

1. Open and close the gate with the TEST BUTTONS, ensuring that the gate is stopping at the proper open and close limit positions.
2. Place an object between the open gate and a rigid structure. Make sure that any external entrapment protection devices will NOT be activated by the object.
3. Run the gate in the close direction. The gate should stop and reverse upon contact with the object. If the gate does not reverse off the object, reduce the force setting by turning the force control slightly counter-clockwise. The gate should have enough force to reach both the open and close limits, but MUST reverse after contact with an object.
4. Repeat the test for the open direction.

Test the operator after any adjustments are made.

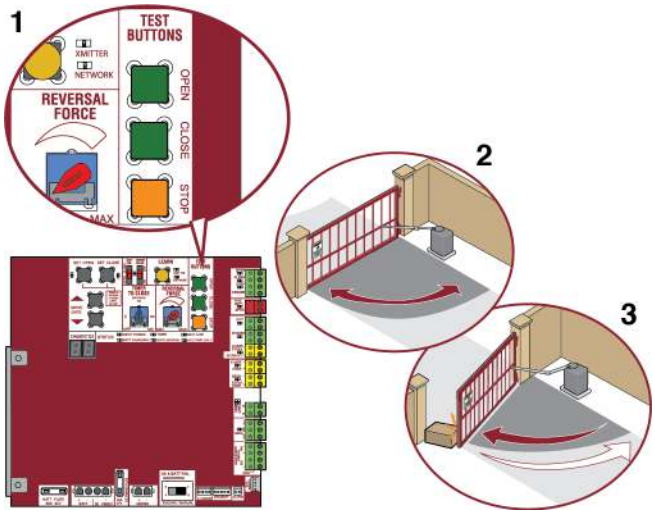

Remote Controls (Not Provided)

A total of 50 Security+ 2.0® remote controls or KPW250 keypads and 2 keyless entries (1 PIN for each keyless entry) can be programmed to the operator. When programming a third keyless entry to the operator, the first keyless entry will be erased to allow the third keyless entry to be programmed. When the operator's memory is full it will exit the programming mode and the remote control will not be programmed. The memory will need to be erased before programming any additional remote controls. ***NOTE:*** *If installing an 86LM to extend the range of the remote controls DO NOT straighten the antenna.*

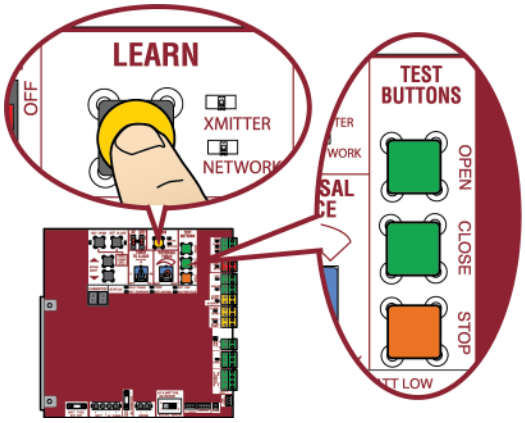

There are 3 different options for programming the remote control depending on how you would like the remote control to function. Choose a programming option:

OPTION	DESCRIPTION	PROGRAMMING STEPS
Single button as OPEN only	Program a single button on the remote control for open only. The Timer-to-Close can be set to close the gate.	1. Press and release the LEARN button (operator will beep and green XMITTER LED will light). ***NOTE:*** *The operator will time out of programming mode after 30 seconds.* 2. Press the OPEN button. 3. Press the remote control button that you would like to program.
Single button (SBC) as OPEN, CLOSE, and STOP	Program one remote control button as an open, close, and stop.	1. Press and release the LEARN button (operator will beep and green XMITTER LED will light). ***NOTE:*** *The operator will time out of programming mode after 30 seconds.* 2. Press the remote control button that you would like to program.
Three separate buttons as OPEN, CLOSE, and STOP	Program each remote control button as an open, close, and stop.	1. Press and release the LEARN button (operator will beep and green XMITTER LED will light). ***NOTE:*** *The operator will time out of programming mode after 30 seconds.* 2. Press the OPEN, CLOSE, or STOP button, depending on the desired function. 3. Press the remote control button that you would like to program.

The operator will automatically exit learn mode (operator will beep and green XMITTER LED will go out) if programming is successful. To program additional Security+ 2.0® remote controls or remote control buttons, repeat the programming steps above.

Entering programming mode using external reset button or 3-button control station:

1. Make sure gate/door is closed.
2. Give the operator an OPEN command.
3. Within 30 seconds, when the gate/door is at the open limit press and release the RESET/STOP button twice to put the operator into programming mode. ***NOTE:*** *The operator will time out of programming mode after 30 seconds.*

NOTICE: This device complies with Part 15 of the FCC rules and Industry Canada's license-exempt RSSs. Operation is subject to the following two conditions: (1) this device may not cause harmful interference, and (2) this device must accept any interference received, including interference that may cause undesired operation.
Any changes or modifications not expressly approved by the party responsible for compliance could void the user's authority to operate the equipment.
This device must be installed to ensure a minimum 20 cm (8 in.) distance is maintained between users/bystanders and device.
This device has been tested and found to comply with the limits for a Class B digital device, pursuant to part 15 of the FCC rules and Industry Canada ICES standard. These limits are designed to provide reasonable protection against harmful interference in a residential installation. This equipment generates, uses and can radiate radio frequency energy and, if not installed and used in accordance with the instructions, may cause harmful interference to radio communications. However, there is no guarantee that interference will not occur in a particular installation. If this equipment does cause harmful interference to radio or television reception, which can be determined by turning the equipment off and on, the user is encouraged to try to correct the interference by one or more of the following measures:
- Reorient or relocate the receiving antenna.
- Increase the separation between the equipment and receiver.
- Connect the equipment into an outlet on a circuit different from that to which the receiver is connected.
- Consult the dealer or an experienced radio/TV technician for help.

LiftMaster Internet Gateway (not provided)

To program the operator to the LiftMaster Internet Gateway:

Using the learn button on the opertaor's control board

1. Connect the ethernet cable to the LiftMaster Internet Gateway and the router.
2. Connect power to the LiftMaster Internet Gateway.
3. Create an online account by visiting www.myliftmaster.com.
4. Register the LiftMaster Internet Gateway.
5. Use an internet enabled computer or smartphone to add devices. The LiftMaster Internet Gateway will stay in learn mode for three minutes.
6. Press the Learn button twice on the primary operator (the operator will beep as it enters learn mode). The LiftMaster Internet Gateway will pair to the operator if it is within range and the operator will beep if programming is successful.

Using the reset button on the operator

1. Connect the ethernet cable to the LiftMaster Internet Gateway and the router.
2. Connect power to the LiftMaster Internet Gateway.
3. Create an online account by visiting www.myliftmaster.com.
4. Register the LiftMaster Internet Gateway.
5. Use an internet enabled computer or smartphone to add devices. The LiftMaster Internet Gateway will stay in learn mode for three minutes.
6. Ensure gate is closed.
7. Give the operator an OPEN command.
8. Within 30 seconds, when the gate is at the open limit press and release the reset button 3 times (on primary gate) to put primary operator into High Band Learn Mode (the operator will beep as it enters learn mode). The LiftMaster Internet Gateway will pair to the operator if it is within range and the operator will beep if programming is successful.

The status as shown by the LiftMaster Internet Gateway app will be either “open” or “closed”. The gate operator can then be controlled through the LiftMaster Internet Gateway app.

Erase All Codes

1. Press and release the LEARN button (operator will beep and green XMITTER LED will light).
2. Press and hold the LEARN button again until the green XMITTER LED flashes and then release the button (approximately 6 seconds). All remote control codes are now erased.

Erase Limits

1. To erase the limits, press and hold the SET OPEN and SET CLOSE buttons simultaneously (5 seconds) until both the SET OPEN and SET CLOSE LEDs blink rapidly and the operator beeps.
2. Release the buttons and the SET OPEN and SET CLOSE LEDs will blink slowly indicating the limits will need to be set.

Constant Pressure Override (CPO)

Constant Pressure Override is for use with KPW5 and KPW250 keypads (not provided). The KPW5/KPW250 wireless commercial keypads are security keypads and can only be programmed to ONE gate operator (see the KPW5/KPW250 manual for complete programming instructions).

The Constant Pressure Override feature is intended to temporarily override a fault in the entrapment protection system, in order to operate the gate until the external entrapment protection device is realigned or repaired. Use the feature only in line of sight of the gate when no obstructions to travel are present. External entrapment protection devices include LiftMaster monitored photoelectric sensors and LiftMaster monitored wired and wireless edge sensors. Be sure to repair or replace these devices promptly if they are not working properly.

To use Constant Pressure Override:

1. Enter a valid 4-digit PIN.
2. Press and hold # for 5 seconds to enter CPO. Continue to hold # to keep the operator in motion. A continuous tone will sound until limit is met and/or # is released.
3. The operator will stop when either the operator reaches a limit or the user releases #.

Gate Hold Open Feature

The gate hold open feature will disable the timer and keep the gate at the open limit. The gate hold open feature can be activated through the Reset Button as described on page 30 or through the KPW5 and KPW250 keypads (not provided).

To use the gate hold open feature:

1. Enter a valid 4-digit PIN when the gate is at the Open Limit and the timer is running
2. The Operator will chirp indicating the timer is canceled.

To restart the gate:

1. Re-enter the 4-digit PIN
2. Activate a Hard input or a programmed remote

To Remove and Erase Monitored Entrapment Protection Devices

1. Remove the entrapment protection device wires from the terminal block.
2. Press and release the SET OPEN and SET CLOSE buttons simultaneously. The SET OPEN and SET CLOSE LEDs will turn on (entering learn limit mode).
3. Press and release both SET OPEN and SET CLOSE buttons again to turn off the SET OPEN and SET CLOSE LEDs (exiting learn limit mode).

Gate operator setup examples

The following are example setups for the gate operator. Your specific site requirements may be different. Always setup the operator system to the site requirements, including all necessary entrapment protection devices.

RESIDENTIAL: One to four residential homes sharing a gated entrance/exit, allowing vehicle access trumps security concerns

COMMERCIAL/GENERAL ACCESS: A residential community (more than four homes) having one or more gated entrances/exits, allowing vehicle access trumps security concerns

COMMERCIAL: Business site where security (gate closed) is important

INDUSTRIAL: Large business site where security is required

SETTING	RESIDENTIAL	COMMERCIAL/GENERAL ACCESS	COMMERCIAL	INDUSTRIAL
Quick Close switch setting	Normally set to OFF. Normal gate close (timer or control).	Normally set to OFF. Normal gate close (timer or control).	Normally set to OFF. Normal gate close (timer or control).	Set to ON, so that gate closes immediately after vehicle passes CLOSE EYES/Interrupt loop.
AC Fail Open switch setting	Normally set to BATT. Run on battery if AC power fails.	Normally set to BATT. For local jurisdiction requirement, set to OPEN so that the gate will open approximately 15 seconds after AC power fail.	Normally set to BATT. Run on battery if AC power fails.	Normally set to BATT. Run on battery if AC power fails.
Low Battery switch setting	Normally set to OPEN. If powered from battery and battery is low, gate automatically opens and stays open.	Normally set to OPEN. If powered from battery and battery is low, gate automatically opens and stays open.	Normally set to CLOSE. If powered from battery and battery is low, gate stays closed.	Normally set to CLOSE. If powered from battery and battery is low, gate stays closed.
Anti-Tail switch setting	Normally set to OFF. CLOSE EYES/Interrupt loop reverses a closing gate.	Normally set to OFF. CLOSE EYES/Interrupt loop reverses a closing gate.	Set to ON. In attempt to prevent vehicle tail-gating, CLOSE EYES/ Interrupt loop pauses a closing gate.	Set to ON. In attempt to prevent vehicle tail-gating, CLOSE EYES/ Interrupt loop pauses a closing gate.
Bipart Delay switch setting	For DUAL-GATE site, set to ON for gate that delays upon opening.	For DUAL-GATE site, set to ON for gate that delays upon opening.	For DUAL-GATE site, set to ON for gate that delays upon opening.	For DUAL-GATE site, set to ON for gate that delays upon opening.
Aux Relay Out – Open Limit Switch	Typically not required.	Use with SAMS (Sequence Access Management System).	1. Use with SAMS (Sequence Access Management System). 2. Connect "Gate Open" indicator (e.g. light).	1. Use with SAMS (Sequence Access Management System). 2. Connect "Gate Open" indicator (e.g. light).
Aux Relay Out – Close Limit Switch	Typically not required.	Typically not required.	Connect "Gate Close/Secure" indicator (e.g. light).	Connect "Gate Close/Secure" indicator (e.g. light).
Aux Relay Out – Gate Motion	Attach alert signal (audible or visual alert system).	Attach alert signal (audible or visual alert system).	Attach alert signal (audible or visual alert system).	Attach alert signal (audible or visual alert system).
Aux Relay Out – Pre-Motion Delay	Attach alert signal (audible or visual alert system).	Attach alert signal (audible or visual alert system).	Attach alert signal (audible or visual alert system).	Attach alert signal (audible or visual alert system).
Aux Relay Out – Power	Attach visual alert to know when system is charging batteries (i.e. not running on batteries).	Attach visual alert to know when system is charging batteries (i.e. not running on batteries).	Attach visual alert to know when system is charging batteries (i.e. not running on batteries).	Attach visual alert to know when system is charging batteries (i.e. not running on batteries).
Cycle Quantity Feedback	Use during servicing only to determine operator cycles.	Use during servicing only to determine operator cycles.	Use during servicing only to determine operator cycles.	Use during servicing only to determine operator cycles.
Fire Dept Open Input	Typically not required.	Connect emergency access system (Knox box switch, SOS system, etc.).	Typically not required.	Typically not required.
Heater Accessory (Model HTR)	The heater keeps the gearbox and batteries at a suitable temperature when the outside temperature is below -4°F. The thermostat MUST be set between 45°F and 60°F to ensure proper gate operation.	The heater keeps the gearbox and batteries at a suitable temperature when the outside temperature is below -4°F. The thermostat MUST be set between 45°F and 60°F to ensure proper gate operation.	The heater keeps the gearbox and batteries at a suitable temperature when the outside temperature is below -4°F. The thermostat MUST be set between 45°F and 60°F to ensure proper gate operation.	The heater keeps the gearbox and batteries at a suitable temperature when the outside temperature is below -4°F. The thermostat MUST be set between 45°F and 60°F to ensure proper gate operation.

Control Board Overview

1 SET OPEN Button: The SET OPEN button sets the OPEN limit. See *Adjust Limits* section.

2 SET CLOSE Button: The SET CLOSE button sets the CLOSE limit. See *Adjust Limits* section.

3 MOVE GATE Buttons: The MOVE GATE buttons will either open or close the gate when the operator is in Limit setting mode. See Adjust Limits section.

4 BATT FAIL:

- When AC power is OFF and battery voltage is critically low the gate will latch at a limit until AC power is restored or batteries voltage increases.
- Option select switch set to OPEN forces gate to automatically open and then latch at the OPEN limit until AC power is restored or battery voltage increases.
- Option select switch set to CLOSE forces gate to latch at CLOSE limit if at CLOSE limit or on next CLOSE command until AC power restored or battery voltage increases.
- Constant pressure on a hard command input overrides to open or close the gate.
- Critically low battery is less than 23 V

5 BIPART DELAY Switch: The LOCK/BIPART DELAY switch is used only for dual gates. See Bipart Delay section.

6 LEARN Button: The LEARN button is for programming remote controls and the network.

7 TIMER-TO-CLOSE dial: The TIMER-TO-CLOSE (TTC) dial can be set to automatically close the gate after a specified time period. The TTC is factory set to OFF. If the TTC is set to the OFF position, then the gate will remain open until the operator receives another command from a control. Rotate the TIMER-TO-CLOSE dial to the desired setting. The range is 0 to 180 seconds, 0 seconds is OFF. ***NOTE:*** *Any radio command, single button control, or CLOSE command on the control board prior to the TTC expiring will close the gate. The TTC is reset by any signals from the open controls, loops, close edges, and close photoelectric sensors (IR's).*

8 REVERSAL FORCE dial: The REVERSAL FORCE dial fine tunes the force. See *Force Adjustment* section.

9 TEST BUTTONS: The TEST BUTTONS will operate the gate (OPEN, STOP and CLOSE).

10 STATUS LEDs: The STATUS LEDs indicate the status of the operator. See Status LED Chart in the Troubleshooting section.

11 DIAGNOSTICS Display: The diagnostics display will show the operator type, firmware version, and codes. The operator type will display as "SG" followed by a "24" which indicates the operator type as CSW24UL. The firmware version will show after the operator type, example "1.2".

12 BACKDRIVE Switch: Set to MANUAL will allow the gate to be manually pushed open or closed if there is a loss of AC and battery power. Set to SECURE makes the gate difficult to push open or closed if there is a loss of AC and battery power.

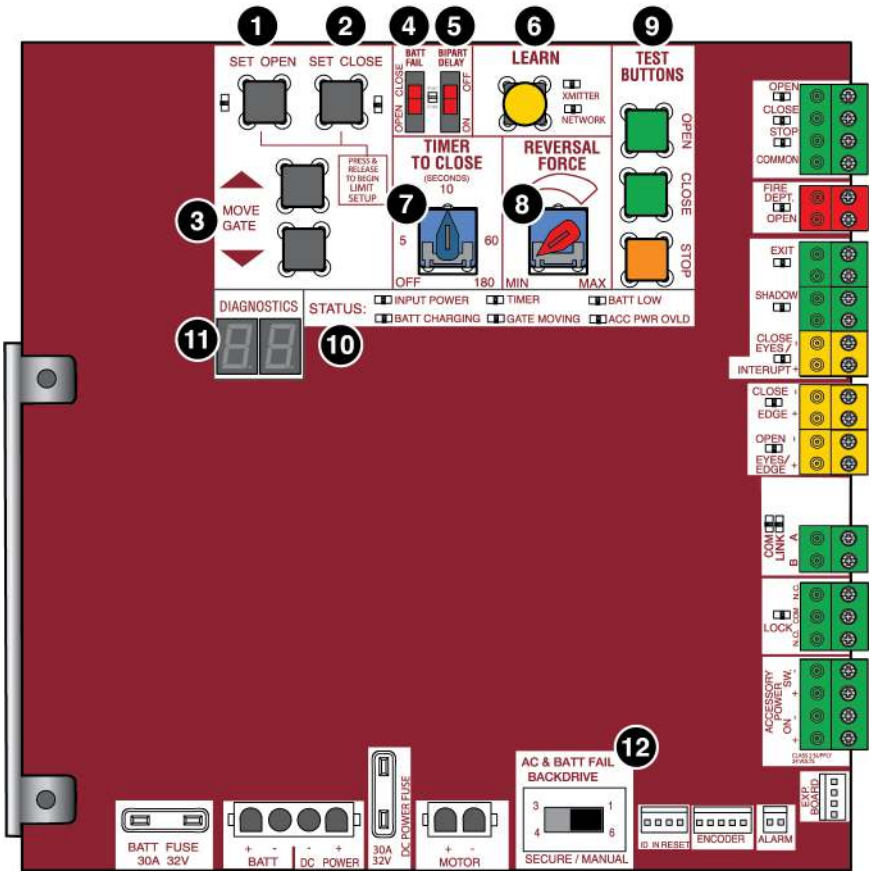

Manual Disconnect

Press the reset switch to RESET/DISCONNECT. Release the handle on the operator arm to allow the gate to be opened and closed manually. On a dual gate application the handle must be released on both operators. To resume normal function tighten the handle by pushing it down.

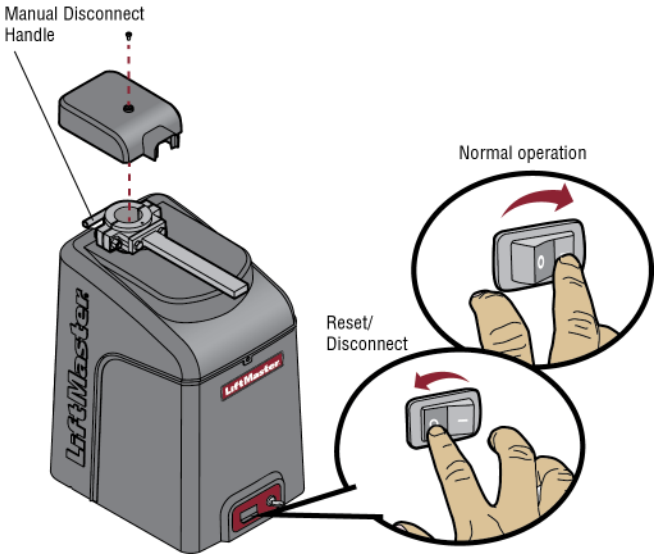

Reset Switch

The reset switch is located on the front of the operator and serves several functions.

Toggling the reset switch will stop a moving gate during a normal open/ close cycle, like a stop button. The operator does not need to be reset after doing this. The reset switch will disable the gate in the present position and will energize the solenoid lock for two minutes and disable the maglock for two minutes.

Operator Alarm

If a contact sensor detects an obstruction twice consecutively the alarm will sound (up to 5 minutes) and the operator will need to be reset.

When the inherent force of the operator (RPM/current sensor) detects the following (twice consecutively) the alarm will sound (up to 5 minutes) and the operator will need to be reset.

A. The operator arm or gate is incorrectly installed.
B. The gate does not meet specifications.
C. Gate hinges are too tight or broken and the gate is not moving freely.
D. The gate is moving and a car pushes the gate.
E. A foreign object is on the gate frame while the gate is moving.
F. The gate hits the driveway or curb and gets stuck or bent in an awkward position.

Remove any obstructions. Press the reset button to shut off the alarm and reset the operator. After the operator is reset, normal functions will resume.

The operator alarm will beep 3 times with a command if the battery is low.

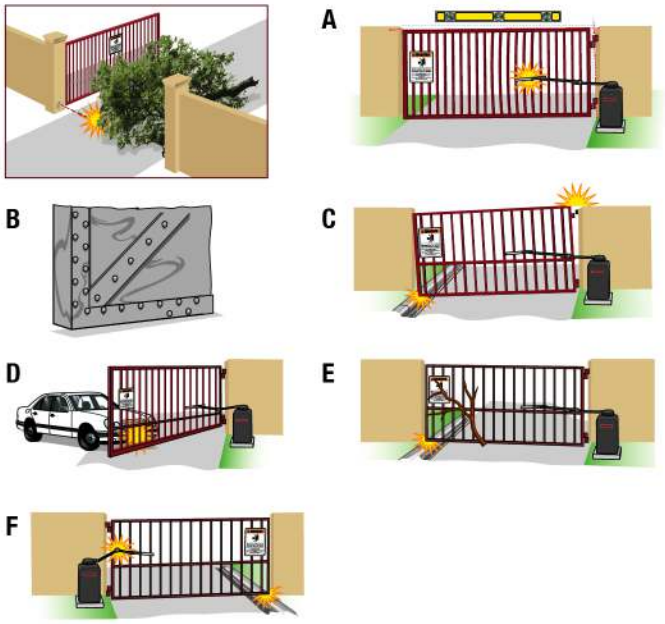

Remote control

Single Button Control (SBC) Functionality

Once the remote control has been programmed the operator will operate as follows:

When gate is in the closed position, activation of the remote control button will open the gate. During the open cycle another activation of the remote control will stop the gate and the next activation of the remote control will close the gate.

When the gate is in the open position, activation of the remote control button will close the gate. If the remote control is activated while the gate is closing, the gate will stop and the next activation will open the gate.

ACCESSORY WIRING

All control wiring used to connect external devices to Class 2 circuits of the operator must be (QPTZ) Power-Limited Circuit Cables, Type CL2, CL2P, CL2R, or CL2X or other cable with equivalent or better electrical, mechanical, and flammability ratings.

External control devices

EXIT (2 Terminals)

This input is a soft open command (maintained switch does not override external safeties and does not reset alarm condition). Used for exit probe, telephone entry, external exit loop detector, or any device that would command the gate to open.

- Opens a closing gate and holds open an open gate, if maintained, pauses Timer-to-Close at OPEN limit.

SHADOW (2 Terminals)

This input is used for external shadow loop detector when loop is positioned under the swing of the gate.

- Holds open gate at open limit
- Only active when the gate is at the OPEN limit, disregarded at all other times
- Pauses Timer-to-Close at OPEN limit

INTERRUPT (2 Terminals)

This input is used for photoelectric sensors and external interrupt loop detector when loop is on the outside of the gate.

- Holds open gate at open limit
- Stops and reverses a closing gate to open limit
- Pauses Timer-to-Close at OPEN limit, activates quick close and anti-tailgate features when enabled on the expansion board

Access control device wiring

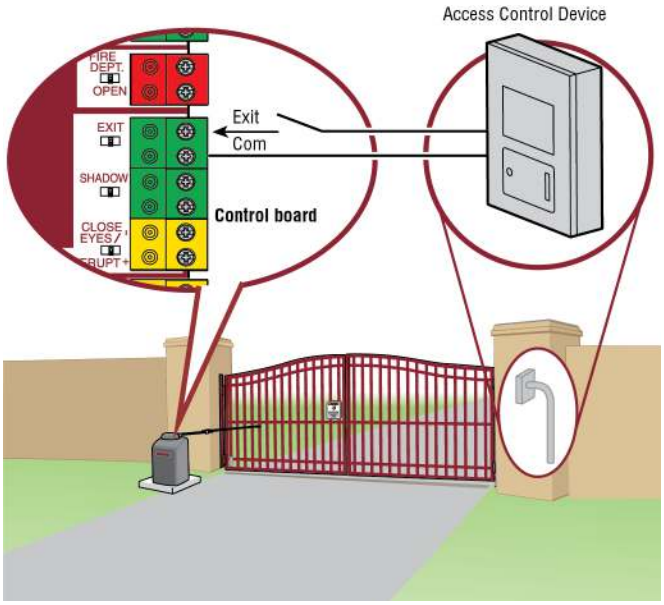

Loop wiring

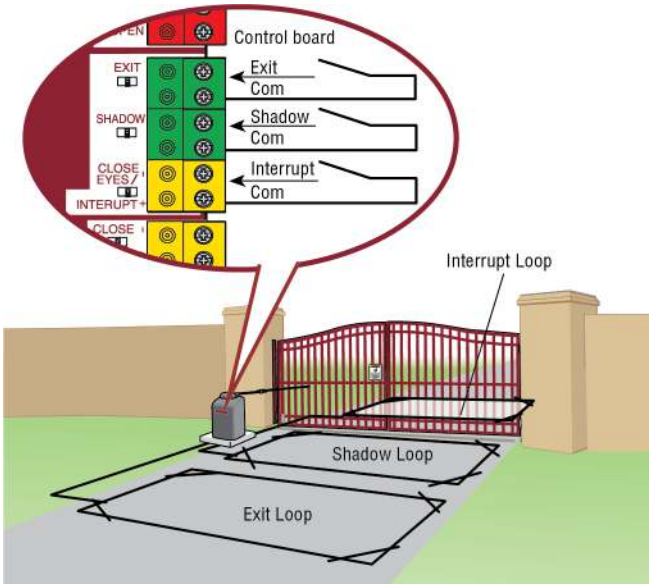

Locks

Maglock (2 Terminals, N.C. and COM)

Relay contact output, Normally - closed (N.C.) output for maglocks.

Relay activates prior to motor activation and during motor run. Relay is off when motor is off.

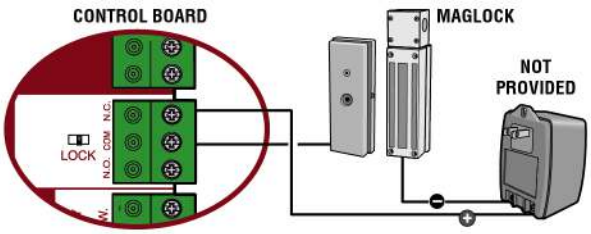

Miscellaneous wiring

Three button control station (4 Terminals)

- OPEN and COM: Opens a closed gate. Hard open (maintained switch overrides external safeties and resets alarm condition). If maintained, pauses Timer-to-Close at OPEN limit. Opens a closing gate and holds open an open gate (within line-of-sight).
- CLOSE and COM: Closes an open gate. Hard close (maintained switch overrides external safeties and resets alarm condition within line-of-sight)
- STOP and COM: Stops a moving gate. Hard stop (maintained switch overrides Open and Close commands and resets alarm condition). If maintained, pauses Timer-to-Close at OPEN limit. Overrides Open and Close commands (within line-of-sight).

Fire department open input (2 Terminals)

Acts as hard open.

Maintained input overrides (ignores) external safeties (photoelectric sensor and edge), pauses Timer-to-Close momentary input logic as single button control and safeties remain active, re-enables Timer-to-Close.

Accessory power 24 VDC, MAX 500 mA (4 Terminals)

- SWITCHED: Switched ON with gate motion and at the open limit when Timer-to-Close is active. Turns off 5 seconds after motion.
- UNSWITCHED: 24 Vdc voltage out to power accessories, always ON.

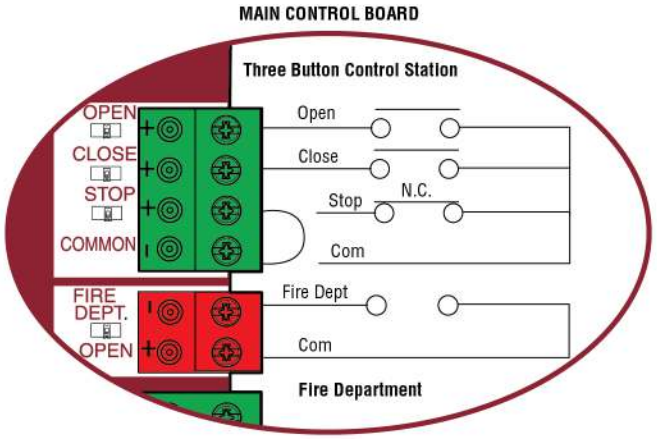

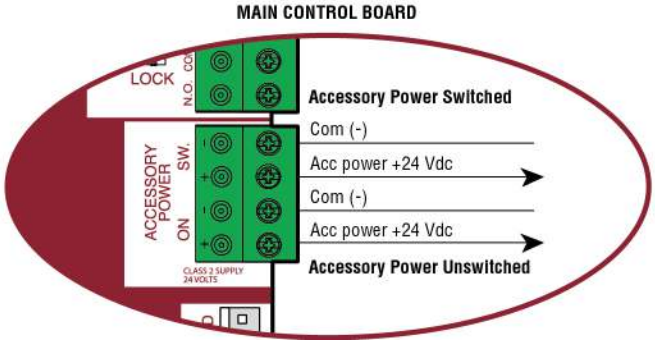

⚠ CAUTION

- To AVOID damaging the circuit board, relays or accessories, DO NOT connect more than 42 Vdc (32 Vac) to the AUX relay contact terminal blocks.

Expansion board overview

1. **QUICK CLOSE switch:**
   OFF: No change to the gate's normal operation.
   ON: When CLOSE EYES/Interrupt loop is deactivated it causes an opening or a stopped gate to close (ignores the Timer-to-Close).
2. **AC FAIL switch:**
   OPEN: Loss of AC power will cause the gate to open approximately 15 seconds after AC power fail and remain OPEN until AC power is restored (enabling the Timer-to-Close).
   BATT: With loss of AC power, gate will remain in present position and operator is powered from batteries.
3. **EXIT FAIL switch:**
   When set to OPEN, if the EXIT plug-in loop detector (Model LOOPDETLM) detects a fault, then the gate will open and remain open until fault is cleared. When set to CLOSE, then plug-in EXIT loop detector faults are ignored (EXIT loop is faulted and inoperative).
4. **ANTI-TAIL switch:**
   OFF: When CLOSE EYES/Interrupt loop is activated it causes a closing gate to stop and reverse.
   ON: When CLOSE EYES/Interrupt loop is activated it causes a closing gate to pause. Once the vehicle is clear the gate will continue to close.
5. **AUX RELAY switches:**
   Set the AUX RELAY switches as needed to obtain the desired function as shown on the following page.
6. **EYE/EDGE switches:**
   Set the EYE/EDGE switches as needed to obtain the desired OPEN or CLOSE functionality.
7. **1, 2, and 3 LEDs:**
   LEDs indicating the status of the EYE/EDGE inputs. Also used to check the firmware version of the expansion board:
   1. Locate the 1, 2, and 3 LEDs on the expansion board.
   2. Disconnect AC/DC power to the main control board for 15 seconds.
   3. Connect power. The 1, 2, and 3 LEDs will flash in sequence until the main control board firmware revision is displayed. When the green POWER LED glows solid the LED 1 will flash the version number, then stop, then the LED 2 will flash the revision number (for example: For version 5.1 when the green POWER LED is solid the LED 1 will flash 5 times, then stop, then the LED 2 will flash once).
8. **MAIN BOARD input:**
   Input Connection for the main board connector.
9. **Input LEDs:**
   LEDs indicating the status of the SBC, OPN, CLS, and STP inputs.
10. **Loop detector inputs:**
    Inputs for the Plug-In Loop Detectors (Model LOOPDETLM)
11. **Wireless edge input:**
    Input for the Wireless Edge Kit (Model LMWEKITU)

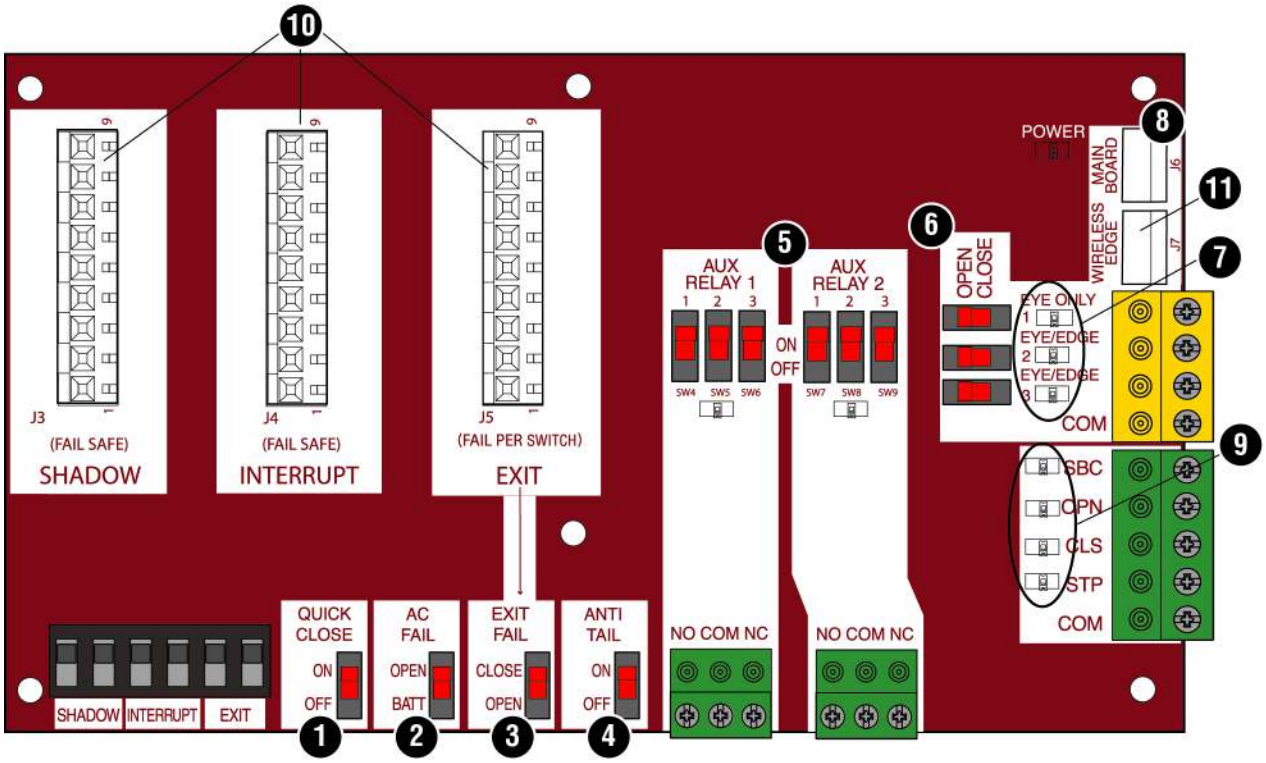

Auxiliary relay 1 and 2

Normally Open (N.O.) and Normally Closed (N.C.) relay contacts to control external devices, for connection of Class 2, low voltage (42 Vdc [34 Vac] max 5 Amps) power sources only. Function of relay contact activation determined by switch settings.

AUX RELAY SETTING	SWITCH SETTINGS			AUX RELAY 1	AUX RELAY 2
	1	2	3		
Off (no feature selected)	OFF	OFF	OFF	Relay always off. Use this Aux Relay setting to conserve battery power.	
Open Limit Switch	OFF	OFF	ON	Energizes at open limit. Use with SAMS (Sequenced Access Management System, jointly with barrier gate).	
Close Limit Switch	OFF	ON	OFF	Energizes when not at close limit. For an additional audible or visual display, connect an external light (low voltage).	
Gate Motion	OFF	ON	ON	Energizes when motor is on (gate in motion). For an additional audible or visual display, connect an external buzzer or light (low voltage).	
Pre-Motion Delay	ON	OFF	OFF	Energizes 3 seconds before gate motion and remains energized during gate motion. The onboard alarm will sound. For an additional audible or visual display, connect an external buzzer or light (low voltage).	Energizes 3 seconds before gate motion and remains energized during gate motion. For an additional audible or visual display, connect an external buzzer or light (low voltage).
Power	ON	ON	OFF	Energizes when AC power or solar power is present. There is approximately a 10-12 second delay before relay cutoff, after AC shutdown.	Energizes when on battery power. There is approximately a 10-12 second delay before relay cutoff, after AC shutdown.
Tamper	ON	OFF	ON	Energizes if gate is manually tampered with by being pushed off of close limit. For an additional audible or visual display, connect an external buzzer or light (low voltage).	
Cycle Quantity Feedback*	ON	ON	ON	The 1, 2, and 3 LEDs will blink out the cycle count (cycle count is stored on the control board). See below.	Red/green light functionality, see below.

* Cycle count

First, note the current Aux Relay switch positions. To determine the actual cycles that the gate operator has run (in thousands), set all three Aux Relay switches to the ON setting for Aux Relay 1. The Expansion Board's 1, 2, and 3 LEDs will blink out the cycle count, with 1 LED blinking 1000's, 2 LED blinking 10,000's, 3 LED blinking 100,000's, and simultaneously all three LED's blink 1,000,000's (e.g. 1 LED blinks 3 times, 2 LED blinks 6 times, and 3 LED blinks once. Cycle count is 163,000.). Cycle count displayed is between 1,000 and 9,999,000 cycles. After servicing, set Aux Relay switches back to their appropriate positions. Cycle count cannot be reset or changed. If under 1,000 cycles the 1, 2, and 3 LEDs will turn on for 10 seconds, then turn off.

NOTE: *The expansion board will flash the cycle count 3 times then all the LEDs will turn on solid for 10 seconds then turn off.*

RED/GREEN LIGHT FUNCTIONALITY						
Red light wired to AUX RELAY 1. Green light wired to AUX RELAY 2.						
GATE STATE	**AUX RELAY 1 SWITCHES**			**AUX RELAY 2 SWITCHES**		
	1 OFF	**2 OFF**	**3 OFF**	**1 ON**	**2 ON**	**3 ON**
Closed	Red light OFF*			Green light OFF		
Opening	Red light ON/Flash			Green light OFF		
Open	Red light OFF			Green light ON		
Closing	Red light ON/Flash			Green light OFF		
Defined Mid Stop	n/a			n/a		
Undefined Mid Stop	Red light ON			Green light OFF		
Timer more than 5 seconds	Red light OFF			Green light ON		
Timer less than 5 seconds	Red light ON/Flash			Green light OFF		
* For red light ON when gate is closed, set switch 1 on AUX RELAY 1 to ON						

Auxiliary relay wiring example

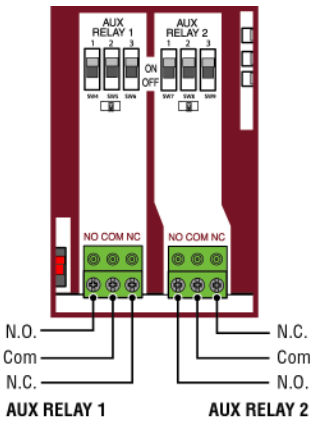

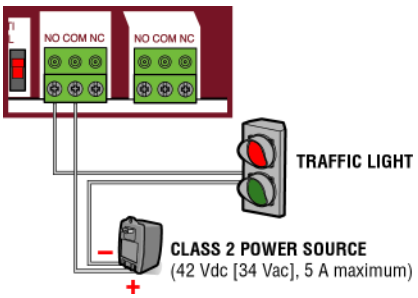

Wiring accessories to the expansion board

Refer to the chart below and the corresponding image for a description of the expansion board inputs.

1	**Wireless edge**	Connection for wireless edge receiver
2	**Entrapment Protection Device Inputs (4 terminals total), Open or Close Direction based on switch setting next to inputs**	EYES ONLY Input: Open or Close Direction Photoelectric Sensors, Close: reverses fully, Open: reverses 4 seconds EYES/EDGE Input(s): Open or Close Direction Photoelectric Sensors, Infra-red detector wired or Edge Sensor, reverses 4 seconds
3	**Single Button Control, SBC (2 terminals)**	Gate command sequence - Open, Stop, Close, Stop, ... Soft Open ,Soft Close, Soft Stop (maintained switch does not override external safeties and does not reset alarm condition)
4	**Open Input (& common) (3-Button Control Station, 4 terminals total)**	Open command - opens a closed gate. Soft open (maintained switch does not override external safeties and does not reset alarm condition) If maintained, pauses Timer-to-Close at OPEN limit. Opens a closing gate and holds open an open gate.
5	**Close Input (& common) (3-Button Control Station, 4 terminals total)**	Close command - closes an open gate. Soft close (maintained switch does not override external safeties and does not reset alarm condition).
6	**Stop Input (& common) (3-PB station, 4 terminals total)**	Stop command - stops a moving gate. Hard stop (maintained switch overrides Open and Close commands and resets alarm condition) If maintained, pauses Timer-to-Close at OPEN limit. Overrides an Open or Close command.
7	**Exit Loop Input (2 terminals)**	Loop wire connection for plug-in loop detector when loop is inside secured area near gate. Open command - opens a closed gate. Soft open (maintained switch does not override external safeties and does not reset alarm condition) If maintained, pauses Timer-to-Close at OPEN limit. Opens a closing gate and holds open an open gate.
8	**Shadow Loop Input (2 terminals)**	Loop wire connection for plug-in loop detector when loop is positioned under the gate. • Holds open gate at open limit • Disregarded during gate motion • Pauses Timer-to-Close at Open Limit
9	**Interrupt Loop Input (2 terminals)**	Loop wire connection for plug-in loop detector when loop is along the side of the gate. • Holds open gate at open limit • Stops and reverses a closing gate • Pauses Timer-to-Close at Open Limit

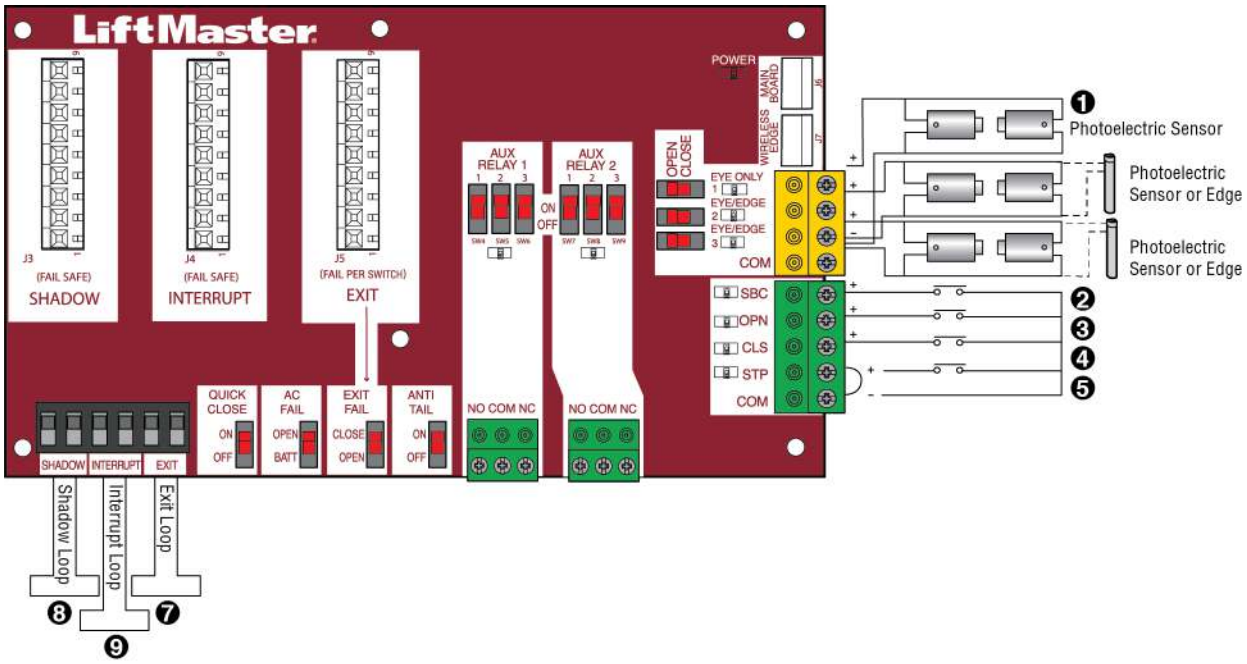

IMPORTANT SAFETY INSTRUCTIONS

⚠ WARNING

To reduce the risk of SEVERE INJURY or DEATH:

- READ AND FOLLOW ALL INSTRUCTIONS.
- ANY maintenance to the operator or in the area near the operator MUST NOT be performed until disconnecting the electrical power (AC or solar and battery) and locking-out the power via the operator power switch. Upon completion of maintenance the area MUST be cleared and secured, at that time the unit may be returned to service.
- Disconnect power at the fuse box BEFORE proceeding. Operator MUST be properly grounded and connected in accordance with national and local electrical codes. ***NOTE:*** *The operator should be on a separate fused line of adequate capacity.*
- NEVER let children operate or play with gate controls. Keep the remote control away from children.
- ALWAYS keep people and objects away from the gate. NO ONE SHOULD CROSS THE PATH OF THE MOVING GATE.
- The entrance is for vehicles ONLY. Pedestrians MUST use separate entrance.
- Test the gate operator monthly. The gate MUST reverse on contact with an object or reverse when an object activates the noncontact sensors. After adjusting the force or the limit of travel, retest the gate operator. Failure to adjust and retest the gate operator properly can increase the risk of INJURY or DEATH.
- Use the manual disconnect release ONLY when the gate is NOT moving.
- KEEP GATES PROPERLY MAINTAINED. Read the owner's manual. Have a qualified service person make repairs to gate hardware.
- ALL maintenance MUST be performed by a LiftMaster professional.
- Activate gate ONLY when it can be seen clearly, is properly adjusted and there are no obstructions to gate travel.
- To reduce the risk of FIRE or INJURY to persons use ONLY LiftMaster part 29-NP712 for replacement batteries.
- **SAVE THESE INSTRUCTIONS.**

⚠ CAUTION

- ALWAYS wear protective gloves and eye protection when changing the battery or working around the battery compartment.

Maintenance Chart

Disconnect all power (AC, solar, battery) to the operator before servicing. The operator's AC Power switch ONLY turns off AC power to the control board and DOES NOT turn off battery power. ALWAYS disconnect the batteries to service the operator.

DESCRIPTION	TASK	CHECK AT LEAST ONCE EVERY		
		MONTH	6 MONTHS	3 YEARS
Entrapment Protection Devices	Check and test inherent (built into the operator) and external devices for proper operation	X		
Warning Signs	Make sure they are present and replace if worn or broken, see *Accessories*	X		
Manual Disconnect	Check and test for proper operation		X	
Sprockets and Chains	Check for excessive slack and lubricate		X	
Gate	Inspect for wear or damage; ensure it still complies with ASTM F2200, see page 5	X		
Accessories	Check all for proper operation		X	
Electrical	Inspect all wire connections		X	
Chassis Mounting Bolts	Check for tightness		X	
Operator	Inspect for wear or damage		X	
Batteries	Replace			X

NOTES:

- *Severe or high cycle usage will require more frequent maintenance checks.*
- *It is suggested that while at the site voltage readings be taken at the operator. Using a digital voltmeter, verify that the incoming voltage to the operator is within ten percent of the operator's rating.*

Batteries

Batteries will degrade over time depending on temperature and usage. The operator alarm will beep 3 times with a command if the battery is low. Batteries do not perform well in extremely cold temperatures. For best performance, the batteries should be replaced every 3 years. Use only LiftMaster part 29-NP712 for replacement batteries. The batteries contain lead and need to be disposed of properly.

The operator comes with two 7AH batteries. Two 33AH batteries (A12330SGLPK), Solar Harness Kit (K94-37236) with additional battery tray (K10-36183) may be used in place of the 7AH batteries. ***NOTE:*** *If your application includes a heater, two 33AH batteries will not fit into the operator enclosure.*

⚠ WARNING

To protect against fire and electrocution:

- DISCONNECT power (AC or solar and battery) BEFORE installing or servicing operator.

For continued protection against fire:

- Replace ONLY with fuse of same type and rating.

Diagnostic Codes

NOTE: *When cycling or disconnecting power (ac/dc) to the control board, it is recommended that you unplug the J15 plug.*

To View the Codes

The codes will show on the diagnostic display.

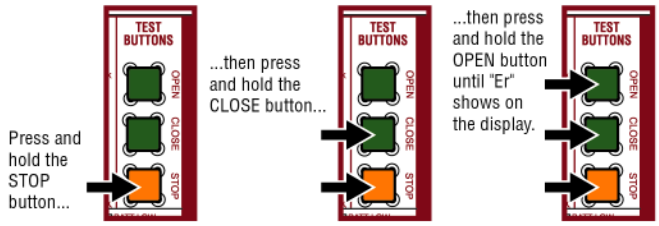

The operator will show the code sequence number followed by the code number:

CODE SEQUENCE NUMBER
The first number shown is the most recent code (example: "01"). The display will show the sequence of codes that occurred starting with "01" and going up to code "20".

A SECOND LATER....

CODE NUMBER
The second number shown after the code sequence number is the code itself (31-99, example" "31"). Refer to the chart on the following page for an explanation of each code.

To Scroll Through the Saved Codes

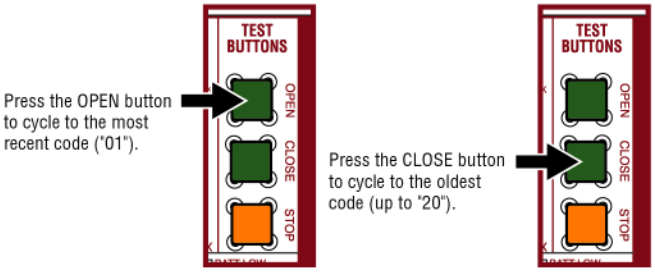

The operator will only keep track of up to 20 codes, then will start saving over the oldest codes as new codes occur.

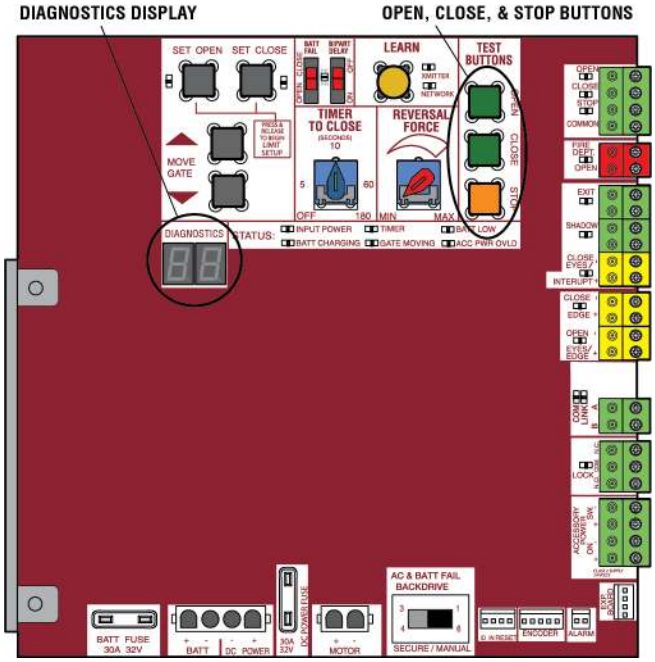

To Exit

Press and release the STOP button to exit. The display will also time out after two minutes of inactivity.

To Reset the Code History

1. Press and hold the STOP button for six seconds. The display will show "Er" then "CL" alternately for six seconds.
2. Release the STOP button. The code history has now been reset and the display will show "- -" until a new code occurs.
3. Press and release the STOP button to exit.

Diagnostic Codes Table

Some codes are saved in the code history and some are not. If a code is not saved it will briefly appear on the display as it occurs, then disappear.

LiftMaster System | Installed System | Informational | External Entrapment Protection | Inherent Entrapment Protection

Code	Meaning	Solution	Saved
31	Main control board has experienced an internal failure.	Disconnect all power, wait 15 seconds, then reconnect power (reboot). If issue continues, replace main control board.	NO
34	Absolute Position Encoder Error, not getting position information from encoder	Check APE assembly and wiring connections. Replace the APE assembly if necessary.	YES
35	Max-Run-Time Exceeded Error	Check for an obstruction, then reprogram the limits.	YES
36	Product ID Error	Was the control board just replaced? If so, erase limits, enter limit setup mode and set limits. If not, disconnect all power, wait 15 seconds, then reconnect power before changing product ID harness.	YES
37	Product ID Failure	Unplug product ID harness then plug back in. Disconnect all power, wait 15 seconds, then reconnect power before replacing product ID harness.	YES
38	Hard Stop Limit (Arm 1)	Limit may be set too tightly against a non-resilient hard stop (re-adjust limit). Operator may be at end of travel (re-adjust mounting).	NO
40	Battery overvoltage	Too much voltage on the battery. Check harness. Make sure there is NOT a 24V battery on a 12V system.	YES
41	Battery overcurrent	Possible short of the battery charge harness. Check harness. Make sure you do NOT have a 12V battery on a 24V system.	YES
42	No battery at boot up	Check battery connections and installation. Replace batteries if depleted to less than 20V on a 24V system or less than 10V on a 12V system. Make sure there is NOT a single 12V battery on a 24V system.	YES
43	Exit Loop Error	Failure or missing loop (SHORT or OPEN - LiftMaster Plug-in Loop Detector only) Check loop wiring throughout connection. May be a short in the loop, or an open connection in the loop.	YES
44	Shadow Loop Error		
45	Interrupt Loop Error		
46	Wireless edge battery low	Replace batteries in wireless edge.	YES
50	Run-Distance Error	The limits are less than the minimum requirement or longer than what was learned. Check limit positions and proper switch function. Run-distance can be re-learned by setting the handing again.	YES
53	Brownout occurred	AC/DC board supply dipped below allowable level. Review power supply and wiring. If rebooting, ensure enough time for discharge of power to force a fresh boot.	YES
54	Wireless Second Operator Communication Error	Check the second operator for power. If OFF, restore power and try to run the system. If powered, deactivate the wireless feature and then re-learn the second operator.	YES
60	Minimum number of monitored entrapment protection devices not installed.	Review monitored entrapment protection device connections. This swing gate operator will operate only after installation of a minimum of one external safety device in either the open or close direction.	NO
61	CLOSE EYE/INTERRUPT held more than 3 minutes	Check wired input on main control board; check for alignment or obstruction.	YES
62	CLOSE EDGE held more than 3 minutes		
63	OPEN EYE/EDGE held more than 3 minutes		
64	CLOSE EYE/INTERRUPT held more than 3 minutes	Check wired input on expansion board; check for alignment or obstruction.	YES
65	CLOSE EYE/EDGE held more than 3 minutes		
66	OPEN EYE/EDGE held more than 3 minutes		
67	Wireless edge triggered more than 3 minutes	Check wired input for wiring issue or obstruction.	YES
68	Wireless edge loss of monitoring	Check wireless edge inputs.	YES

TROUBLESHOOTING

Code	Meaning	Solution	Saved
69	Wireless edge triggered	IF an obstruction occurred, no action required. If an obstruction did NOT occur, check inputs and wiring.	NO
70	CLOSE EYE/INTERRUPT triggered, causing reversal, preventing close, or resetting TTC	IF an obstruction occurred, no action required. If an obstruction did NOT occur, check alignment, inputs, and wiring on main control board	NO
71	CLOSE EDGE triggered, causing reversal, NO preventing close, or canceling TTC		
72	OPEN EYE/EDGE triggered, causing reversal or preventing opening		
73	CLOSE EYE/INTERRUPT triggered, causing reversal, preventing close, or resetting TTC	IF an obstruction occurred, no action required. If an obstruction did NOT occur, check alignment, inputs, and wiring on expansion board.	NO
74	CLOSE EYE/EDGE triggered, causing reversal and preventing close or canceling TTC		
75	OPEN EYE/EDGE triggered, causing reversal or preventing opening		
80	Close input (EYE/EDGE) communication fault from other operator	Check inputs and communication method between operators, either wired bus or radio. Ensure operator is powered. May have to erase the wireless communication and reprogram the two operators.	YES
81	Open input (EYE/EDGE) communication fault from other operator		
82	Close input (EYE/EDGE) communication fault (expansion board)	Check the connections between the main board and the expansion board.	YES
83	Open input (EYE/EDGE) communication fault (expansion board)		
84	Non-monitored device detected on the wireless safety system	Non-monitored contact closure devices are not supported. Make sure connected devices are monitored. Check edges for proper orientation and resistive end cap connection.	YES
91	Force Reversal (Operator 1)	Check for obstruction. If no obstruction, check that the mechanical assembly is engaged and free to move. See section on Limit and Force Adjustment, and Obstruction Test.	YES
93	RPM / STALL Reversal (Operator 1)	Check for obstruction. If no obstruction, check the operator wiring and that the mechanical assembly is engaged and free to move. Replace APE assembly.	YES
99	Normal Operation	No action required	YES

Control Board LEDs

STATUS LEDS		
INPUT POWER	OFF	OFF state
	ON	AC charger or Solar power available
BATT CHARGING	OFF	Not charging
	ON	Three stage battery charging
TIMER	OFF	The timer is disabled
	ON	The timer is enabled
	MEDIUM BLINK (1 blink per second)	The timer is running
	FAST BLINK (2 blinks per second)	The timer is paused
	FASTEST BLINK (8 blinks per second)	The timer is canceled
GATE MOVING	OFF	The gate is stopped
	ON	The gate is opening or closing
	MEDIUM BLINK (1 blink per second)	Operator is in E1 (single entrapment)
	FASTEST BLINK (8 blinks per second)	The operator is in E2 (double entrapment)
BATT LOW	OFF	No battery error
	ON	Battery low
	MEDIUM BLINK (1 blink per second)	Battery critically low
ACC PWR OVLD	OFF	Accessory power is okay
	ON	Accessory overload protector opened

INPUT LEDS		
OPEN, CLOSE, STOP INPUT	OFF	Input inactive
	ON	Input active
	BLINK	Input active on other operator
FIRE DEPT INPUT	OFF	Input inactive
	ON	Input active
	BLINK	Input active on other operator
EXIT	OFF	Input inactive
	ON	Input active
	BLINK	Input active on other operator
SHADOW	OFF	Input inactive
	ON	Input active
	BLINK	Input active on other operator
CLOSE EYES/INTERRUPT	OFF	Input inactive
	ON	Input active
	BLINK	Input active on other operator
CLOSE EDGE	OFF	Input inactive
	ON	Input active
	BLINK	Input active on other operator
OPEN EYES/EDGE	OFF	Input inactive
	ON	Input active
	BLINK	Input active on other operator
LOCK	OFF	Maglock relay inactive
	ON	Maglock relay active

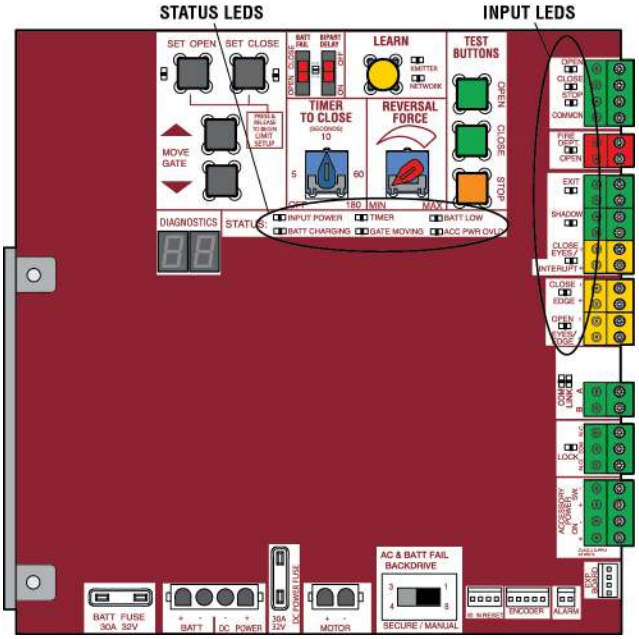

Troubleshooting Chart

SYMPTOM	POSSIBLE CAUSES	SOLUTIONS
Operator does not run and diagnostic display not on.	a. No power to control board b. Open fuse c. If on battery power only, low or dead batteries d. Defective control board	a. Check AC and battery power b. Check fuses c. Charge batteries by AC or solar power or replace batteries d. Replace defective control board
Control board powers up, but motor does not run.	a. Reset switch is stuck b. Stop button active or jumper not in place for stop circuit c. If on battery power only, low or dead batteries d. Open or Close input active e. Entrapment Protection Device active f. Vehicle loop detector or probe active g. Defective control board	a. Check reset switch b. Check Stop button is not “stuck on”, or verify that the stop button is a normally closed circuit, or put a jumper on the stop circuit. c. Charges batteries by AC or solar power or replace batteries d. Check all Open and Close inputs for a “stuck on” input e. Check all Entrapment Protection Device inputs for a “stuck on” sensor f. Check all vehicle detector inputs for a “stuck on” detector g. Replace defective control board
Gate moves, but cannot set correct limits.	a. Gate does not move to a limit position b. Gate is too difficult to move	a. Use manual disconnect, manually move gate, and ensure gate moves easily limit to limit. Repair gate as needed. b. Gate must move easily and freely through its entire range, limit to limit. Repair gate as needed.
Gate does not fully open or fully close when setting limits.	a. Gate does not move to a limit position b. Gate is too difficult to move	a. Use manual disconnect, manually move gate, and ensure gate moves easily limit to limit. Repair gate as needed. b. Gate must move easily and freely through its entire range, limit to limit. Repair gate as needed.
Operator does not respond to a wired control/command (example: Open, Close, SBC, etc.)	a. Check Open and Close command input LEDs b. Stop button is active c. Reset button is stuck d. If on battery power only, low or dead batteries e. Entrapment Protection Device active f. Vehicle loop detector or vehicle probe active	a. Check all Open and Close inputs for a “stuck on” input b. Check Stop button is not “stuck on” c. Check Reset button d. Charges batteries by AC or solar power or replace batteries e. Check all Entrapment Protection Device inputs for a “stuck on” sensor f. Check all vehicle detector inputs for a “stuck on” detector
Operator does not respond to a wireless control or transmitter	a. Check XMITTER LED when wireless control is active b. Stop button is active c. Reset button is stuck d. Poor radio reception	a. Activate wireless control and check XMITTER LED is on. Re-learn wireless control/transmitter to control board. Replace wireless control as needed. b. Check Stop button is not “stuck on” c. Check Reset button d. Check if similar wired control operates correctly. Check if wireless controls works properly when within a few feet of operator. Check operator’s antenna and antenna wire. Check other wireless controls or devices.
Gate stops during travel and reverses immediately.	a. Control (Open, Close) becoming active b. Vehicle loop detector active c. Low battery voltage	a. Check all Open and Close inputs for an active input b. Check all vehicle detector inputs for an active detector c. Battery voltage must be 23.0 Vdc or higher. Charge batteries by AC or solar power or replace batteries
Gate opens, but will not close with transmitter or Timer-to-Close.	a. Open control active b. Vehicle loop detector active c. Loss of AC power with AC FAIL set to OPEN d. Low battery with LOW BATT set to OPEN e. Fire Dept input active f. Timer-to-Close not set g. Close Entrapment Protection Device active	a. Check all Open inputs for an active input b. Check all vehicle detector inputs for an active detector c. Check AC power and AC Fail option setting d. Check if AC power is available. If no AC power, then running on batteries and battery voltage must be 23.0 Vdc or higher. Charge batteries by AC or solar power or replace batteries. e. Check Fire Dept input f. Check Timer-to-Close (TTC) setting g. Check all Entrapment Protection Device inputs for an active sensor

TROUBLESHOOTING

SYMPTOM	POSSIBLE CAUSES	SOLUTIONS
Gate closes, but will not open.	a. Vehicle loop detector active b. Low battery with LOW BATT option set to CLOSE	a. Check all vehicle detector inputs for an active detector b. Check if AC power is available. If no AC power, then running on batteries and battery voltage must be 23.0 Vdc or higher. Charge batteries by AC or solar power or replace batteries.
Exit loop activation does not cause gate to open.	a. Exit vehicle detector setup incorrectly b. Defective Exit loop detector c. Low battery with LOW BATT option set to CLOSE	a. Review Exit loop detector settings. Adjust settings as needed. b. Replace defective Exit loop detector. c. Check if AC power is available. If no AC power, then running on batteries and battery voltage must be 23.0 Vdc or higher. Charge batteries by AC or solar power or replace batteries.
Interrupt loop does not cause gate to stop and reverse.	a. Vehicle detector setup incorrectly b. Defective vehicle loop detector c. Anti-tail set to ON	a. Review Interrupt loop detector settings. Adjust settings as needed. b. Replace defective Interrupt loop detector. c. Set anti-tail to OFF.
Shadow loop does not keep gate at open limit.	a. Vehicle detector setup incorrectly b. Defective vehicle loop detector	a. Review Shadow loop detector settings. Adjust settings as needed. b. Replace defective Shadow loop detector.
Obstruction in gate's path does not cause gate to stop and reverse.	a. Force adjustment needed	a. Refer to the Adjustment section to conduct the obstruction test and perform the proper force adjustment that is needed.
Photoelectric sensor does not stop or reverse gate.	a. Incorrect photoelectric sensor wiring b. Defective photoelectric sensor	a. Check photoelectric sensor wiring. Retest that obstructing photoelectric sensor causes moving gate to stop, and may reverse direction. b. Replace defective photoelectric sensor. Retest that obstructing photoelectric sensor causes moving gate to stop, and may reverse direction.
Edge Sensor does not stop or reverse gate.	a. Incorrect edge sensor wiring b. Defective edge sensor	a. Check edge sensor wiring. Retest that activating edge sensor causes moving gate to stop and reverse direction. b. Replace defective edge sensor. Retest that activating edge sensor causes moving gate to stop and reverse direction.
Alarm sounds for 5 minutes or alarm sounds with a command.	a. Double entrapment occurred (two obstructions within a single activation)	a. Check for cause of entrapment (obstruction) detection and correct. Press the reset button to shut off alarm and reset the operator.
Alarm beeps three times with a command.	a. Low battery	a. Check if AC power is available. If no AC power, then running on batteries and battery voltage must be 23.0 Vdc or higher. Charge batteries by AC or solar power or replace batteries
On dual-gate system, incorrect gate opens first or closes first.	a. Incorrect Bipart switch setting	a. Change setting of both operator's Bipart switch settings. One operator should have Bipart switch ON (operator that opens second) and the other operator should have Bipart switch OFF (operator that opens first).
Alarm beeps when running.	a. Expansion board setting b. Constant pressure to open or close is given	a. Pre-warning is set to "ON" b. Constant pressure to open or closed is given
Expansion board function not controlling gate.	a. Defective main board to expansionboard wiring b. Incorrect input wiring to expansion board c. Defective expansion board or defective main board	a. Check main board to expansion board wiring. If required, replace wire cable. b. Check wiring to all inputs on expansion board. c. Replace defective expansion board or defective main board
Maglock not working correctly.	a. Maglock wired incorrectly	a. Check that Maglock is wired to N.C. and COM terminals. Check that Maglock has power (do not power maglock from control board accessory power terminals). If shorting lock's NO and COM wires does not activate Maglock, then replace Maglock or Maglock wiring (refer to Wiring Diagrams).

TROUBLESHOOTING

SYMPTOM	POSSIBLE CAUSES	SOLUTIONS
Solenoid lock not working correctly.	a. Solenoid wired incorrectly	a. Check that Solenoid is wired to N.O. and COM terminals. Check that Solenoid has power (do not power solenoid from control board accessory power terminals). If shorting lock's NC and COM wires does not activate Solenoid, then replace Solenoid lock or Solenoid wiring (refer to Wiring Diagrams).
Switched (SW) Accessory power remaining on.	a. In limit setup mode	a. Learn the limits
Accessories connected to Switch (SW) Accessory power not working correctly, turning off, or resetting.	a. Normal behavior	a. Move accessory to accessory power "ON"
Accessories connected to Accessory power not working correctly, turning off, or resetting.	a. Accessory power protector active b. Defective control board	a. Disconnect all accessory powered devices and measure accessory power voltage (should be 23 – 30 Vdc). If voltage is correct, connect accessories one at a time, measuring accessory voltage after every new connection. b. Replace defective control board
Quick Close not working correctly.	a. Quick Close setting incorrect b. Interrupt loop detector c. Defective Expansion board	a. Check that Quick Close setting is ON b. Check operation of Interrupt Loop detector c. Replace defective Expansion board
Anti-Tailgating not working correctly.	a. Anti-Tail setting incorrect b. Interrupt loop detector c. Defective Expansion board	a. Check that Anti-Tail setting is ON b. Check operation of Interrupt Loop detector c. Replace defective Expansion board
AUX Relay not working correctly.	a. AUX Relay setting incorrect b. AUX Relay wiring incorrect c. Defective Expansion board	a. Check AUX Relay switches settings b. Check that wiring is connected to either N.O. and COM or to N.C. and COM. c. Set AUX Relay to another setting and test. Replace defective expansion board.
Solar operator not getting enough cycles per day.	a. Insufficient panel wattage b. Excessive accessory power draw c. Old batteries d. Solar panels are not getting enough sunlight	a. Add more solar panels b. Reduce the accessory power draw by using LiftMaster low power accessories c. Replace batteries d. Relocate the solar panels away from obstructions (trees, buildings, etc.)
Solar operator, insufficient standby time.	a. Insufficient panel wattage b. Excessive accessory power draw c. Battery capacity too low	a. Add more solar panels b. Reduce the accessory power draw by using LiftMaster low power accessories c. Use batteries with higher amp hour (AH) rating

Step 8 Solar Panel(s)

SOLAR PANELS ARE NOT PROVIDED. SEE ACCESSORIES

Solar Application Requirements

- A minimum of two 10W solar panels in series (Model SP10W12V).
- A maximum of six 10W solar panels (Model SP10W12V).
- Battery Tray (Model K10-36183) required for 33AH batteries.
- Solar Harness Kit (Model K94-37236).
- A heater cannot be used with a solar application.

Solar Zones

Solar panel recommendations are based upon the average solar radiation and the temperature effects on batteries in the given zones as shown on the map below. Local geography and weather conditions may require additional solar panels. Solar powered gate operator installations are not supported in northern climates due to cold weather and a reduced number of hours of sunlight during the winter months. The cycles/day ratings are approximations. Ratings vary based on gate construction, installation, and temperature. Solar panels cannot be installed in areas that experience long periods of heavy fog, lake effect snow, or rain.

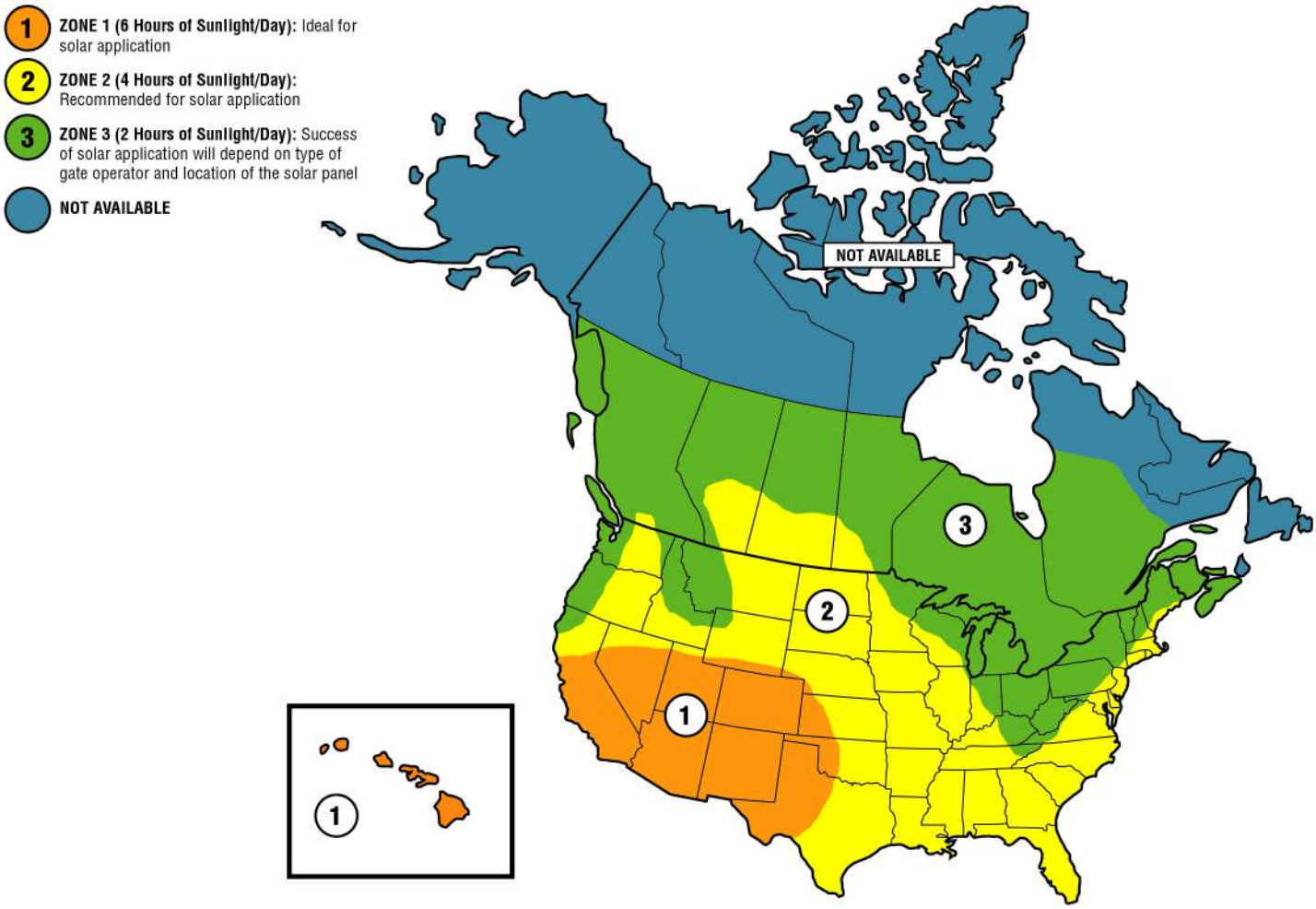

Solar usage guide

Typical System Standby Battery Current Consumption (mA)	
System voltage	24V
Main board with no radios programmed	2.7 mA
One or more LiftMaster® remote controls programmed	+1 mA
MyQ® device or wireless dual gate programmed	+2.4 mA
Expansion board	+11.1 mA
Per loop detector LOOPDETLM (up to 3 loop detectors can be plugged in to the expansion board)	+3.8 mA
Add up current draw by feature and accessory to determine total current draw	

NOTE: *The use of photoelectric sensor heaters (models LMRRUL and LMTBUL) is NOT recommended in solar applications.*

SOLAR GATE CYCLES PER DAY							
	BATTERY CURRENT DRAW (mA)	ZONE 1		ZONE 2		ZONE 3	
		7AH batteries	33AH batteries	7AH batteries	33AH batteries	7AH batteries	33AH batteries
10W SOLAR PANEL	5	26	28	15	17		
	15	22	24	12	13		
	20	20	22		11		
	40	12	14				
	60						
20W SOLAR PANEL (Two 10W 12V panels in series)	5	57	67	34	40	14	16
	15	52	62	30	36	10	12
	20	50	60	28	33		11
	50	36	45	15	20		
	100	15	23				
40W SOLAR PANEL (Two 20W 12V panels in series)	5	108	152	65	92	27	38
	15	103	147	60	87	23	34
	20	100	144	58	84	21	32
	100	58	99	21	44		
	200	14	47				
60W SOLAR PANEL	5	134	240	81	146	34	61
	15	128	234	76	140	29	56
	20	125	231	73	137	27	54
	100	82	181	34	92		18
	250	12	95		20		

Position

The location of the panel(s) is critical to the success of the installation. In general, the panel(s) should be mounted using the provided angle bracket facing **due south**. The solar panel(s) should be mounted in an area clear of all obstructions and shade from buildings and trees. If the panel(s) is not casting a shadow, the battery is not being charged.

NOTE: *Tall trees or buildings that do not shade the solar panel(s) in the summer could shade the solar panel(s) during the winter months when the sun sits lower in the sky.*

MAXIMUM WIRE LENGTH			
AMERICAN WIRE GAUGE (AWG)	20 WATTS OF PANELS	40 WATTS OF PANELS	60 WATTS OF PANELS
16	235 (71.6 m)	115 (35.1 m)	80 (24.4 m)
14	375 (114.3 m)	190 (57.9 m)	125 (38.1 m)
12	600 (182.9 m)	300 (91.4 m)	200 (61 m)
10	940 (286.5 m)	475 (144.8 m)	315 (96 m)
Chart assumes: copper wire, 65°C, 5% drop, 30V nominal			

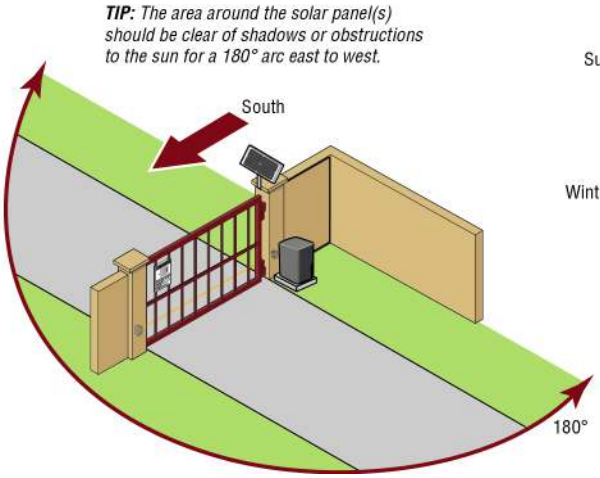

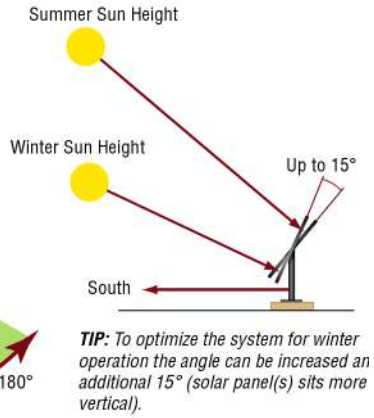

Installation

Solar panel(s) MUST be installed facing south. Use a compass to determine direction. Below are general instructions for installing the solar panel(s). Your installation may vary slightly depending on the solar panel purchased.

1. Position the mounting bracket on the mounting surface. Mark and drill holes.
2. Secure the solar panel to the mounting bracket using the hex bolts, hex nuts and washers provided.
3. Secure the solar panel to the mounting surface using lag screws provided.

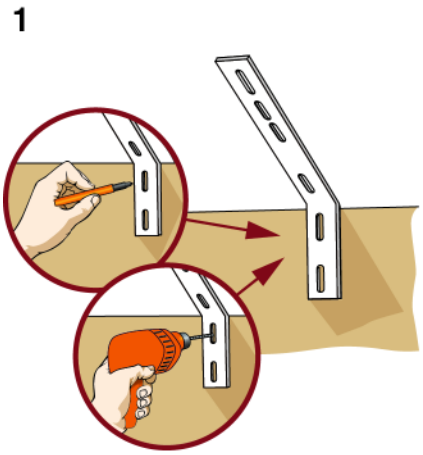

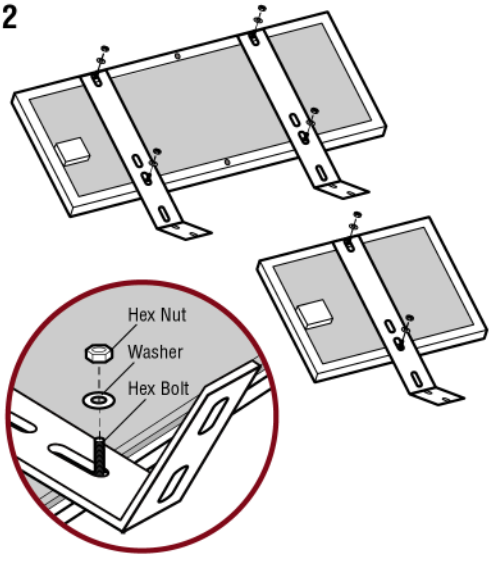

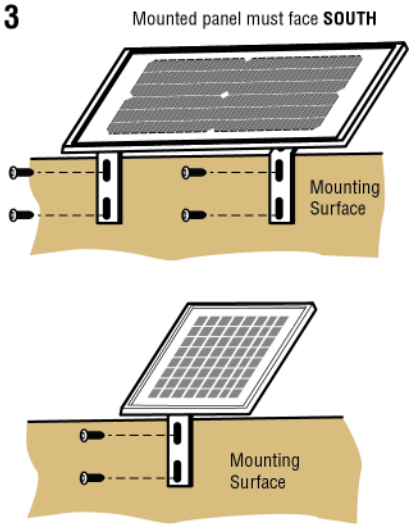

Wire the Batteries

Solar panel applications require the Solar Harness Kit model K94-37236, see *Accessories*.

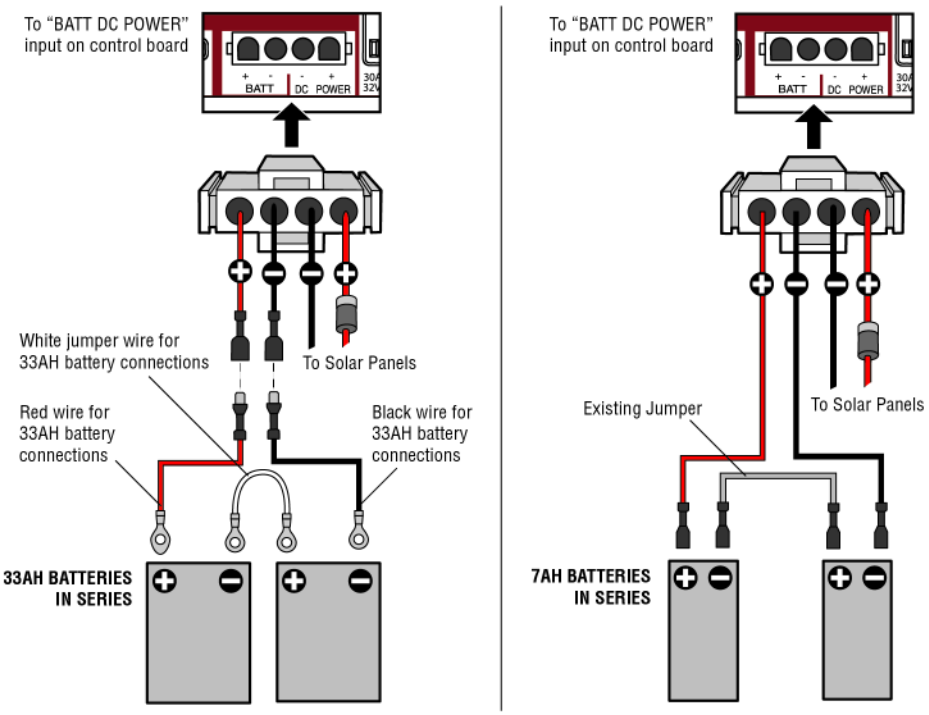

Wire the solar panels

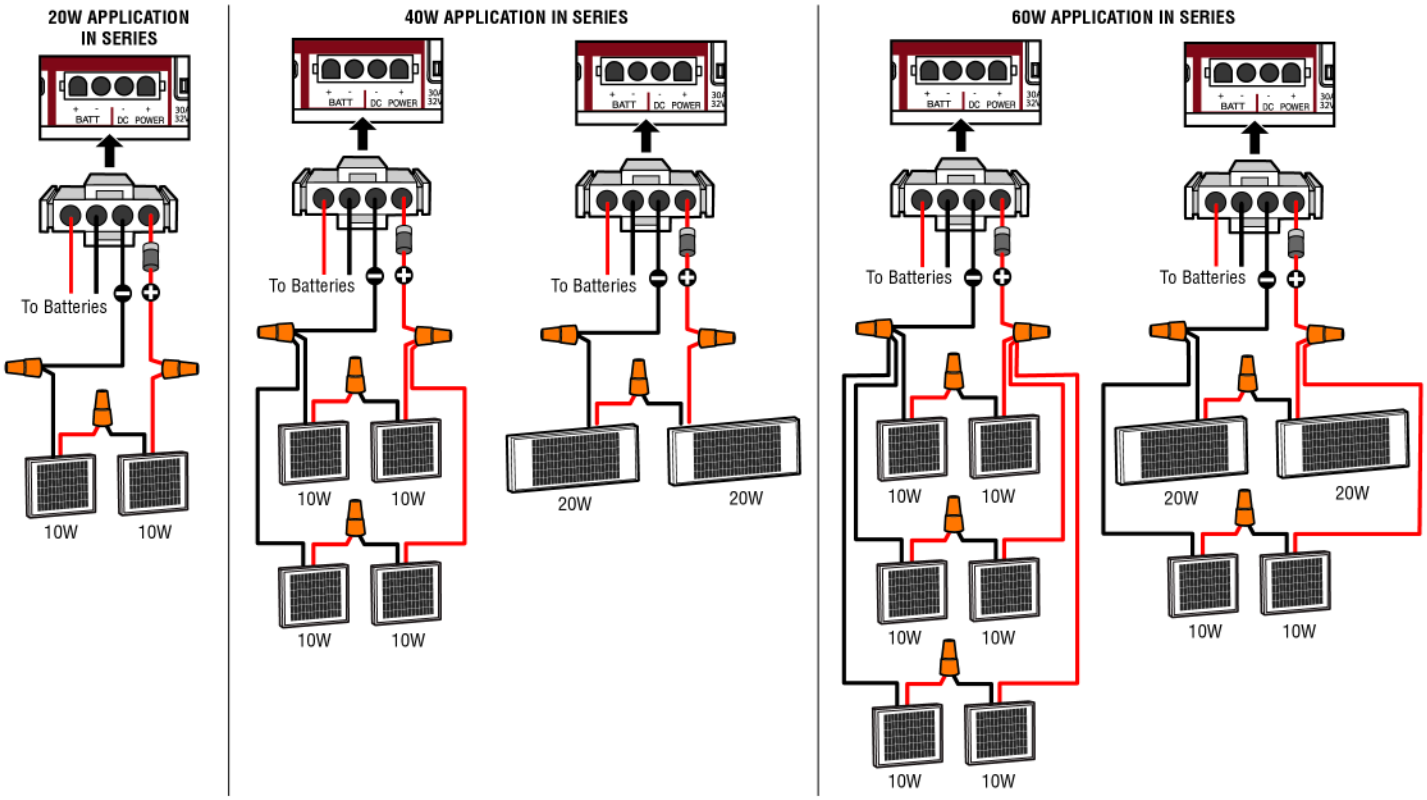

Proceed to the Dual Gate section (if applicable) or proceed to the Adjustment section.

SAMS wiring with relays not energized

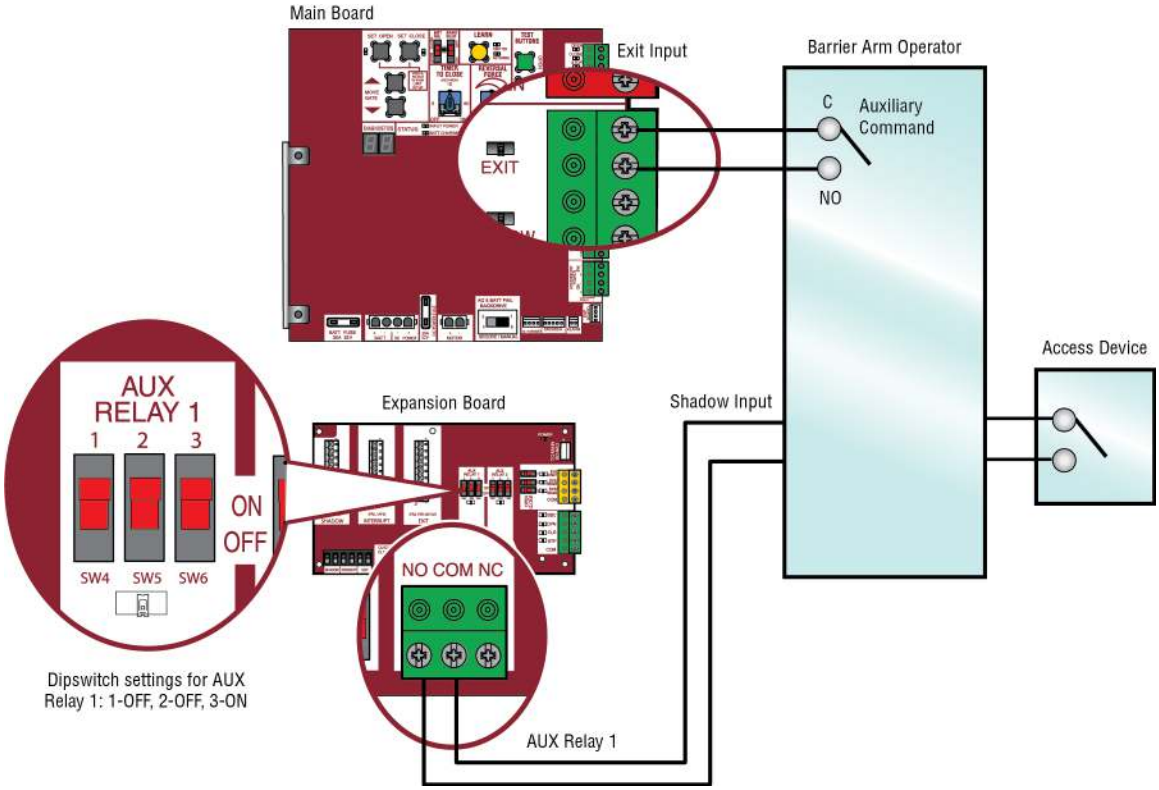

Dual Gate Settings

NOTE: *We recommend that all accessories and board configurations are set on the primary operator.*

Main control board

FEATURE	PRIMARY OPERATOR	SECONDARY OPERATOR
Timer-to-Close	Set the TTC dial to desired setting	OFF
Bi-Part Delay Switch	Bi-Part Delay: ON (will open last and close first) Tandem Mode: OFF Synchronized Close: ON	Bi-Part Delay: OFF (will open first and close last) Tandem Mode: OFF Synchronized Close: ON

Expansion board

FEATURE	PRIMARY OPERATOR	SECONDARY OPERATOR
QUICK CLOSE Switch	ON	OFF
ANTI-TAIL Switch	ON	OFF
LOW BATT Switch	Battery Fail OPEN: OPEN Battery Fail CLOSE: CLOSE	Battery Fail OPEN: OPEN Battery Fail CLOSE: CLOSE
AC FAIL OPEN/BATT Switch	OPEN	OPEN

Accessories

ACCESSORY	PRIMARY OPERATOR	SECONDARY OPERATOR
Remote Controls	Program remote controls 1 to 50 to the primary operator.	Program remote controls 51 to 100 to the secondary operator
LiftMaster Internet Gateway	Program to primary operator.	
Garage and Gate Monitor	Program to primary operator.	

⚠ WARNING

To reduce the risk of INJURY keep clear of moving arm while setting limits.

Limit Setup with a Remote Control

To set the limits using a remote control, first you will need a 3-button remote control that has been programmed for OPEN, CLOSE, and STOP. Refer to the Programming section.

Initial Limits and Force Adjustment

For dual gate applications the limits will have to be set for each operator. The gate MUST be attached to the operator before setting the limits and force.

Ensure the gate is closed.

1. Press and release the SET OPEN and SET CLOSE buttons simultaneously to enter limit setting mode.
2. Press and hold the OPEN or CLOSE button on the remote control until the gate reaches the desired open position. The gate can be jogged back and forth using the OPEN and CLOSE buttons on the remote control.
3. Once the gate is in the desired open position, press and release the STOP button on the remote control.
4. Press and release the OPEN button on the remote control again to set the open limit.
5. Press and hold the CLOSE or OPEN button on the remote control until the gate reaches the desired close position. The gate can be jogged back and forth using the OPEN and CLOSE buttons on the remote control.
6. Once the gate is in the desired close position, press and release the STOP button on the remote control.
7. Press and release the CLOSE button on the remote control again to set the close limit.
8. Cycle the gate open and close. This automatically sets the force.

When limits are set properly the operator will automatically exit limit setting mode.

Refer to the *Adjustment* section and follow the instructions for *Fine Tune the Force* and *Obstruction Test* . Perform the "Obstruction Test" after every limit and force setting adjustment.

Adjust the limits

If the limits have already been set the operator will exit the limit setting mode after resetting each limit.

Set the Close Limit Only

1. Press and release the SET OPEN and SET CLOSE buttons simultaneously to enter limit setting mode.
2. Press and hold the CLOSE button on the remote control until the gate reaches the desired close position. The gate can be jogged back and forth using the OPEN and CLOSE buttons on the remote control.
3. Once the gate is in the desired close position, press and release the STOP button on the remote control.
4. Press and release the CLOSE button on the remote control again to set the close limit.

When the close limit is set properly the operator will automatically exit limit setting mode.

Set the Open Limit Only

1. Press and release the SET OPEN and SET CLOSE buttons simultaneously to enter limit setting mode.
2. Press and hold the OPEN button on the remote control until the gate reaches the desired open position. The gate can be jogged back and forth using the OPEN and CLOSE buttons on the remote control.
3. Once the gate is in the desired open position, press and release the STOP button on the remote control.
4. Press and release the OPEN button on the remote control again to set the open limit.

When the open limit is set properly the operator will automatically exit limit setting mode.

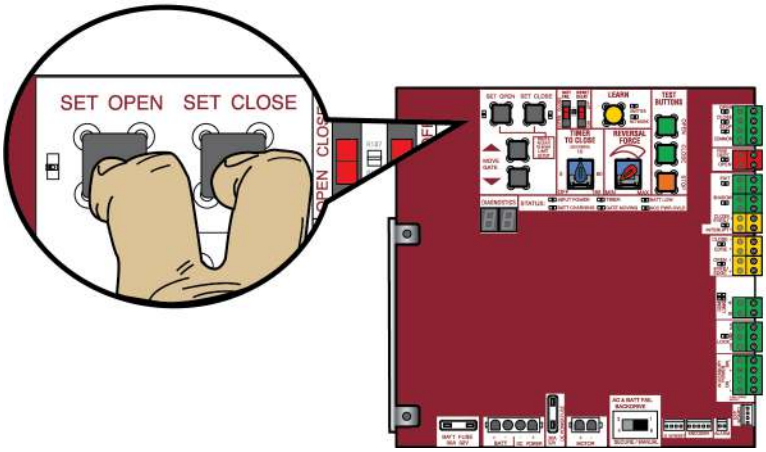

3-Button Remote Control programmed for OPEN, CLOSE, and STOP

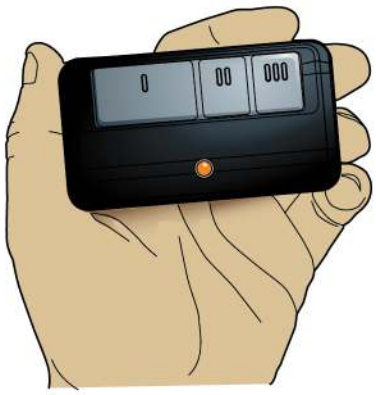

WIRING DIAGRAM

⚠ WARNING

To protect against fire and electrocution:

- DISCONNECT power (AC or solar and battery) BEFORE installing or servicing operator.

For continued protection against fire:

- Replace ONLY with fuse of same type and rating.

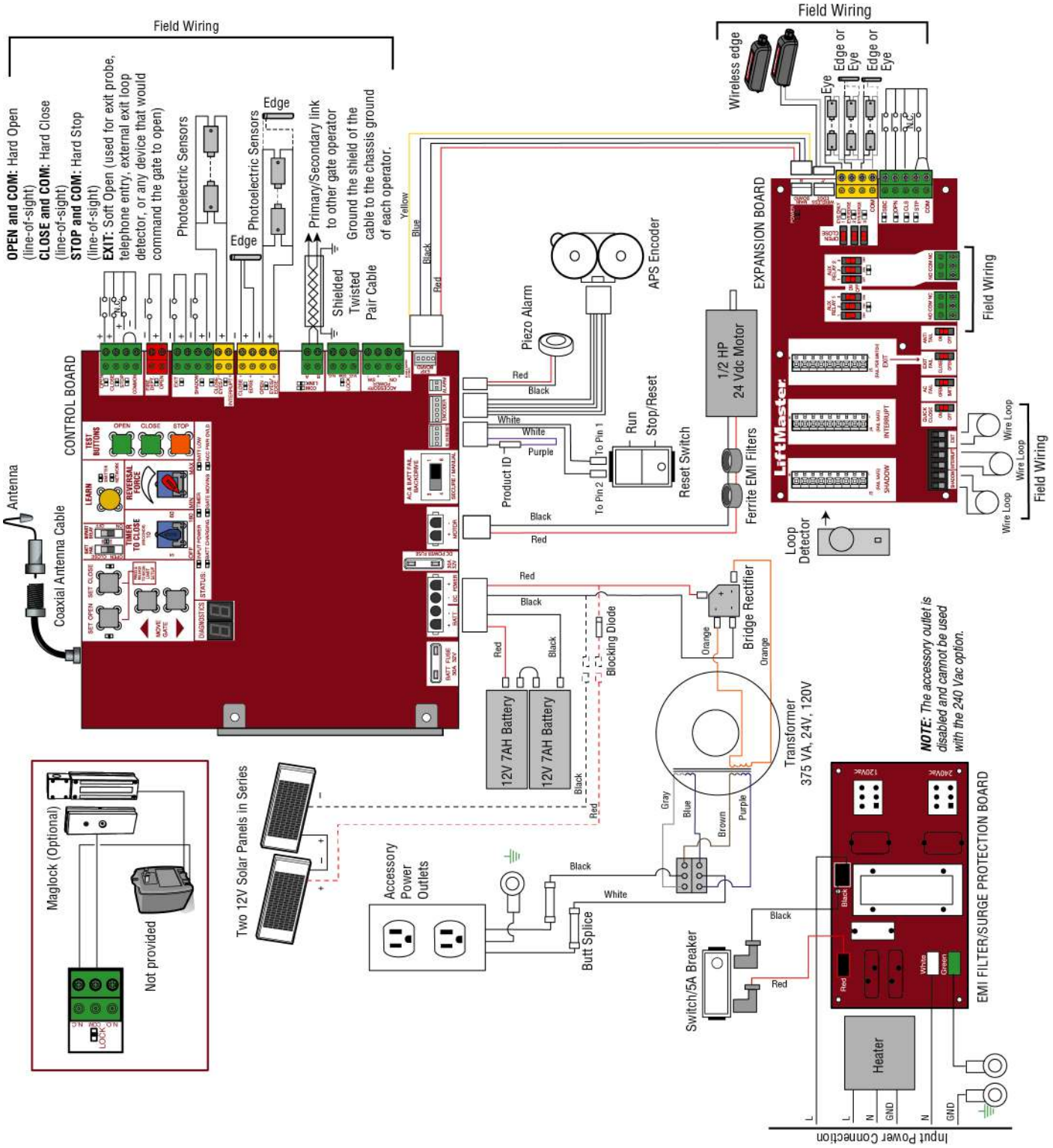

REPAIR PARTS

NOT SHOWN	
K94-36540	Wiring Harness with product ID assembly
K94-37205	Battery Harness (for 7AH batteries)
K80-36544	Vent Plug (for top gear box)
K80-36545	Vent Plug (for bottom gear box)
K74-30762	Two 7AH batteries
K94-37236	Solar Harness Kit
K94-34778	Wire harness between main control board and expansion board

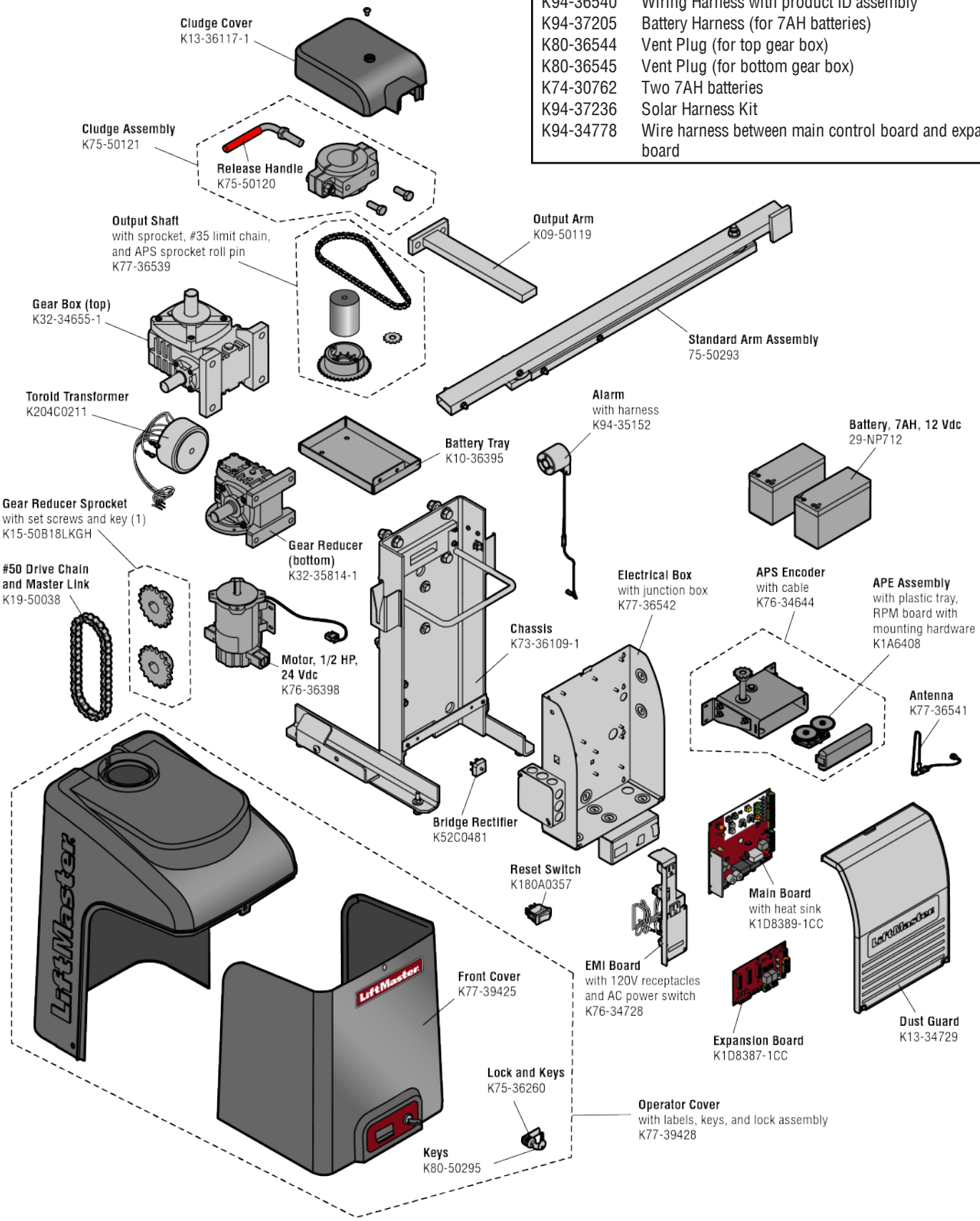

ACCESSORIES

Entrapment Protection

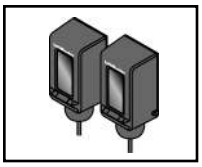

LiftMaster monitored through beam photoelectric sensor
Model LMTBUL

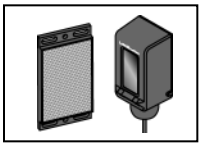

LiftMaster monitored retro-reflective photoelectric sensor
Model LMRRUL

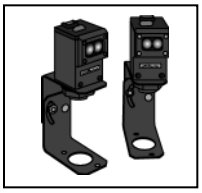

LiftMaster Monitered Commercial Protector System®
Models CPS-UN4 and CPSUN4G

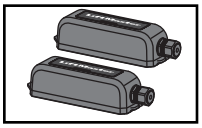

LiftMaster monitored wireless edge kit (transmitter and receiver)
Model LMWEKITU

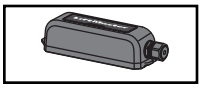

LiftMaster monitored wireless edge transmitter
Model LMWETXU

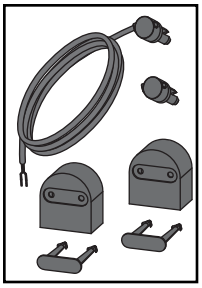

Large profile monitored edge (82 ft. roll)
Model L50
Large profile ends kit (10 pair)
Model L50E
Small profile monitored edge (82 ft. roll)
Model S50
Small profile ends kit (10 pair)
Model S50E

Plastic channel
8 ft. (2.4 m) for both small and large profile edges (pack of 10).
Model L50CHP
Aluminum channel
10 ft. (3.1 m) for both small and large edge profiles (pack of 8).
Model L50CHAL
LiftMaster large profile monitored edges (4ft.,5ft., 6ft.)
Model L504AL, L505AL, L506AL
Edge cutting tool
Model ETOOL

Remote Controls

LiftMaster offers a variety of LiftMaster remote controls to satisfy your application needs. Single-button to 4-button, visor or key chain. The following remote controls are compatible with operators manufactured by LiftMaster after 1993. Contact your authorized LiftMaster dealer for additional details and options.

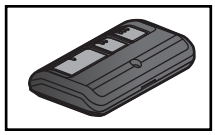

3-button remote control
The 3-button remote control can be programmed to control the operator. Includes visor clip.
Model 893MAX

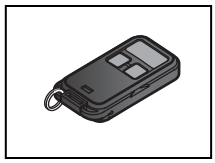

3-button mini-remote control
The 3-button remote control can be programmed to control the operator. Includes key ring and fastening strip.
Model 890MAX

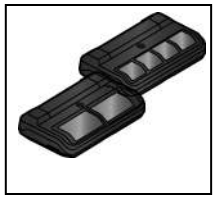

Security+ 2.0® learning remote controls
One button can control a gate operator and the other (s) can control garage door(s). It can also be programmed to Security+® or Security+ 2.0® code format.
Models 892LT and 894LT

Universal single and 3-button remote controls
Ideal for applications requiring a large number of remote controls.
Models 811LM and 813LM

Keyless entry
Enables homeowner to operate gate operator from outside by entering a 4-digit code on a specially designed keypad.
Model 877MAX

Wireless commercial keypad
Durable wireless keypad with blue LED backlight metal keypad, zinc-alloy metal front cover and 5 year 9V lithium battery. Security+ 2.0® compatible.
Model KPW250

Commercial access control receiver
Access control receiver for up to 1,000 devices (any combination of remote controls and wireless keyless entries).
Model STAR1000

Miscellaneous

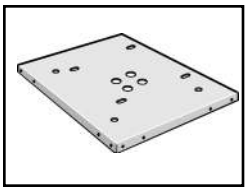

Post-mounting plate

For post-mounting models CSL24UL, CSW24UL CSW200UL and SL3000UL commercial gate operators. Posts not included.

Model MPEL

Remote antenna extension kit

The remote antenna extension kit allows the antenna to be remotely installed.

Model 86LM

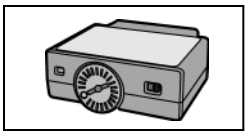

Plug-in loop detector

Low power. Conveniently plugs into existing control board.

Model LOOPDETLM

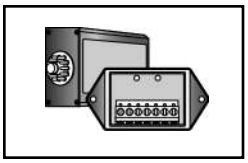

Loop Detector

Low power loop detectors mounted and wired separately inside control box. LiftMaster low power accessory.

Model LD7LP

Vehicle sensing probe

The vehicle sensing probe is buried in the ground and can detect a car as it approaches and will then open the gate.

Model CP3

Solar panel kit

This kit is to replace or add a solar panel to the operator application. 60W maximum for 24 Vdc operators and 30W maximum for 12 Vdc operators. Requires a 33AH battery harness.

Models SP10W12V (10 Watt, 12V) and SP20W12V (20 Watt, 12V)

Magnetic gate lock

Outdoor magnetic lock, transformer, junction box, mounting plate and hardware. Not for use with Solar Applications. Must be powered separately.

Model MG1300

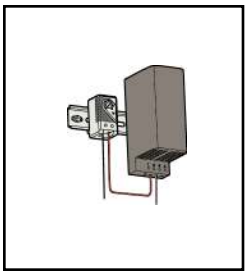

Heater

The heater keeps the gearbox and batteries at a suitable temperature when the outside temperature is below -4°F (-20°C). The thermostat MUST be set between 45°F and 60°F (7°C and 15.5°C) to ensure proper gate operation. The heater can be powered by 110 to 250 Vac.

Model HTR

LiftMaster® internet gateway

Internet enabled accessory which connects to the computer and allows you to monitor and control gate operators and lighting accessories enabled by MyQ® technology.

Model 828LM

LiftMaster Cloud™ connected access protocol - high capacity

Model CAPXL

Warning sign

Model 40-39235

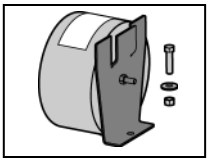

Transformer kit

Changes input voltage (208/240/480/575 Vac) to an output voltage of 120 Vac. Rated 208/240/480/575 Vac, 4.8/4.2/2.1/1.7 A, 60 Hz, 1 PH

Model 3PHCONV

Solenoid lock harness kit

Model K77-37972

Batteries

Gate access system batteries replace or upgrade the gate operator batteries. Two identical 12 Vdc batteries are required for each gate operator. Do not mix 7AH and 33AH batteries within a gate operator.

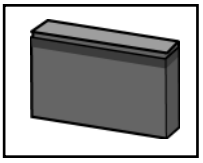

7AH batteries

Standard 7 AMP-Hour Battery, 12 Vdc, to replace original batteries provided with operator. Reuse existing harnesses.

Models 29-NP712 (1) and K74-30762 (2)

33AH batteries

Upgrade 33 AMP-Hour Battery, 12 Vdc. Ideal for solar applications and extended battery backup. Two required.

Model A12330SGLPK

Battery tray

Two required for 33AH applications.

Model K10-36183

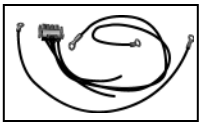

Universal solar wire harness kit

For 7AH and 33AH applications.

Model K94-37236

WARRANTY

LiftMaster 7 year residential / 5 year commercial Limited Warranty

LiftMaster ("Seller") warrants to the first purchaser of this product, for the structure in which this product is originally installed, that it is free from defect in materials and/or workmanship for a period of 7 year residential / 5 year commercial from the date of purchase [and that the CSW24UL is free from defect in materials and/or workmanship for a period of 7 year residential / 5 year commercial from the date of purchase]. The proper operation of this product is dependent on your compliance with the instructions regarding installation, operation, maintenance and testing. Failure to comply strictly with those instructions will void this limited warranty in its entirety.

If, during the limited warranty period, this product appears to contain a defect covered by this limited warranty, call **1-800-528-2806**, toll free, before dismantling this product. Then send this product, pre-paid and insured, to our service center for warranty repair. You will be advised of shipping instructions when you call. Please include a brief description of the problem and a dated proof-of-purchase receipt with any product returned for warranty repair. Products returned to Seller for warranty repair, which upon receipt by Seller are confirmed to be defective and covered by this limited warranty, will be repaired or replaced (at Seller's sole option) at no cost to you and returned pre-paid. Defective parts will be repaired or replaced with new or factory-rebuilt parts at Seller's sole option.

ALL IMPLIED WARRANTIES FOR THE PRODUCT, INCLUDING BUT NOT LIMITED TO ANY IMPLIED WARRANTIES OF MERCHANTABILITY AND FITNESS FOR A PARTICULAR PURPOSE, ARE LIMITED IN DURATION TO THE 7 YEAR RESIDENTIAL / 5 YEAR COMMERCIAL LIMITED WARRANTY PERIOD SET FORTH ABOVE [EXCEPT THE IMPLIED WARRANTIES WITH RESPECT TO THE CSW24UL, WHICH ARE LIMITED IN DURATION TO THE 7 YEAR RESIDENTIAL / 5 YEAR COMMERCIAL LIMITED WARRANTY PERIOD FOR THE CSW24UL, AND NO IMPLIED WARRANTIES WILL EXIST OR APPLY AFTER SUCH PERIOD. Some states do not allow limitations on how long an implied warranty lasts, so the above limitation may not apply to you. THIS LIMITED WARRANTY DOES NOT COVER NON-DEFECT DAMAGE, DAMAGE CAUSED BY IMPROPER INSTALLATION, OPERATION OR CARE (INCLUDING, BUT NOT LIMITED TO ABUSE, MISUSE, FAILURE TO PROVIDE REASONABLE AND NECESSARY MAINTENANCE, UNAUTHORIZED REPAIRS OR ANY ALTERATIONS TO THIS PRODUCT), LABOR CHARGES FOR REINSTALLING A REPAIRED OR REPLACED UNIT, OR REPLACEMENT OF BATTERIES.

THIS LIMITED WARRANTY DOES NOT COVER ANY PROBLEMS WITH, OR RELATING TO, THE GATE OR GATE HARDWARE, INCLUDING BUT NOT LIMITED TO THE GATE SPRINGS, GATE ROLLERS, GATE ALIGNMENT OR HINGES. THIS LIMITED WARRANTY ALSO DOES NOT COVER ANY PROBLEMS CAUSED BY INTERFERENCE. ANY SERVICE CALL THAT DETERMINES THE PROBLEM HAS BEEN CAUSED BY ANY OF THESE ITEMS COULD RESULT IN A FEE TO YOU.

UNDER NO CIRCUMSTANCES SHALL SELLER BE LIABLE FOR CONSEQUENTIAL, INCIDENTAL OR SPECIAL DAMAGES ARISING IN CONNECTION WITH USE, OR INABILITY TO USE, THIS PRODUCT. IN NO EVENT SHALL SELLER'S LIABILITY FOR BREACH OF WARRANTY, BREACH OF CONTRACT, NEGLIGENCE OR STRICT LIABILITY EXCEED THE COST OF THE PRODUCT COVERED HEREBY. NO PERSON IS AUTHORIZED TO ASSUME FOR US ANY OTHER LIABILITY IN CONNECTION WITH THE SALE OF THIS PRODUCT.

Some states do not allow the exclusion or limitation of consequential, incidental or special damages, so the above limitation or exclusion may not apply to you. This limited warranty gives you specific legal rights, and you may also have other rights which vary from state to state.

300 Windsor Drive
Oak Brook, IL 60523
LiftMaster.com

© 2018, The Chamberlain Group, Inc. - All Rights Reserved

01-39380B