Installation and Programming Manual

StrongArmPark™ DC

DC10, DCS10, DC14, DCS14

Vehicular barrier arm operator with Smart DC Controller

Nice

HySecurity®

Page intentionally left blank

Contents

StrongArmPark DC Breakaway Arm Bracket Installation 3

StrongArmPark DC Components: Arm Chassis 4

StrongArmPark DC Components: Control Box and Arm Configurations 5

Exploded View MX4050 Kit 5

StrongArmPark DC Installer CheckList 6

Welcome to HySecurity 10

Contact Information 10

Notices and Bulletins 10

Manual Release 21

Breakaway Arm Feature 21

Dynamic Reversing Sensor 21

Power 22

Installing the Earth Ground 22

Wiring AC Power 23

Wiring 115VAC Power 24

Wiring 208/230VAC Power 25

Connecting DC Power 26

Turning the Power Switch ON 26

Display & Menu Options 27

Initial Setup 27

Understanding the Display and Keypad 27

Menu Mode 28

Menu Mode Navigation 28

Smart DC Controller: Menu Mode Navigation Buttons 28

Run Mode 29

Viewing Operator Status Displays 29

Example of Operator Status Displays 29

User Menu 30

Table 3: User Menu 30

Installer Menu 32

Table 4: Installer Menu 33

Setting the Time and Date 38

Resetting Open and Close Limits 38

Learn Open Limits 39

Learn Close Limits 39

Test the Operator 39

Setting the Close Timer 40

SDC Inputs & Wiring 41
Overview of the Smart DC Controller 42
Integrating with Security Systems 43
Smart DC Controller Inputs 44
SDC Terminal Inputs 44
Table 5: SDC Inputs 44
SDC Inputs 45
Connecting Accessory Devices 46
User Relays - Programming Procedure 47
Table 6: Programmable User Relays 47
Revenue Control Parking Applications 49
Table 7: Programmable User Relays, Revenue Control 49
Extended Relay Module Option 50
Vehicle Detector Installation and Loop Layouts 51
Anti-TailGate Mode (Closing Logic) 51
TailGate Alert 51
Vehicle Detectors and the Smart DC Controller 52
Hy5B Installation 52
Test the Vehicle Loop 53
Check the Version of Software 53
Install Hy5B Vehicle Detectors 54
Installing Standard 11-Pin Box Type Vehicle Detectors 56
StrongArmPark DC Center Loop Layout 57
StrongArmPark DC Center Loop Configuration 58
Sequenced Gates #1: Loop Layout 59
StrongArmPark DC Loop Layout 59
Sequenced Gates #2: Loop Layout 60
StrongArmPark DC Loop Layout 60
Photo Eye Installation 61
Photo Eyes (Non-Contact) Installation 62
Compatibility 62
Installation 62
Configuration 63
Photo Eye Connections: Smart Touch & Smart DC Controllers 63
Photo Eye Function 63
Retro-Reflective Photo Eye Systems 64
Photo Eye Alignment Feature 65
Smart DC Controller: Menu Mode Navigation Buttons 65
Troubleshooting 66
System Diagnostic Messages 66
Table 8: Troubleshooting Codes 67
Adjusting the Dynamic Reversing Sensor 74
StrongArmPark DC Wiring Schematics 75

StrongArmPark DC 10 and StrongArmPark DC 14 Schematics 75
StrongArmPark DC Wiring Schematics - Solar 76
StrongArmPark DCS 10 Solar and StrongArmPark DCS 14 Solar Schematics 76
General Maintenance 77
Smart Touch Analyze and Retrieve Tool (S.T.A.R.T.) 77
What You Need 77
Installing S.T.A.R.T. Software 77
Software Maintenance 78
Electrical Controls 78
Clock Battery Replacement 78
Fuse Replacement 78
Mechanical Maintenance 79
HyProtect™ Breakaway Arm Mount 79
Breakaway Fasteners 79
Drive Belt Tension and Alignment 80
DC Battery Replacement 81
Reference 83
Handing Change 83
Spring & Physical Stop Lever Assembly 84
Set Handing 84
Installation Instructions MX4010 85
StrongArmPark DC Articulating Arm 85
Assemble the Pivot Block and Connect Light Strings 86
Feeding the cable (LED lighting) through the Pivot Block 86
StrongArmPark DC: Articulating Arm Assembly 87
Remove Plugs in Chassis 87
Assemble Arm onto chassis 87
Feed Cable through Chassis 87
Fasten Articulating Arm Bracket to Rod End and attach assembly to Chassis 87
StrongArmPark DC: Lighting Connection 88
Smart DC Controller: Menu Mode Navigation Buttons 88
Connect Arm Light Cables 88
Turn OFF AC and DC power 88
Arm Lights and Breakaway Switch Connections on Smart DC Controller 89
Retrofit Requires Hole Drilled in Chassis 89
StrongArmPark DC Breakaway Arm Bracket Installation 90
Warranty 91
Specifications 92

NOTICE

Visit https://hysecurity.com/technical-support/ for installation manuals, replacement part instructions, part diagrams and more.

StrongArmPark DC Breakaway Arm Bracket Installation

Tools Required

- Utility knife
- Standard socket set
- Standard hex key set

To review the installation video, scan the QR code with your cell phone or click on the Youtube video location: https://youtu.be/AdTWNYcC-NU

In a short 8 minutes, the installation video shows you how to:

1. Install the breakaway arm bracket
2. Connect the magnetic kill switch
3. Connect the arm lighting and feed wire through the chassis to the controller (5:50 min)
4. Program the controller, Installer Menu setting "BA" Breakaway switch.

To install the breakaway arm bracket onto the StrongArmPark DC, you can take the steps shown here and view the video for additional step clarification.

1 Make sure AC and DC power switches are in the OFF position.

2 Connect the red battery wire.

(Refer to step 4 in the Installation Instructions.)

3 Press the DC switch ON and toggle HOLD switch to Hold Open.

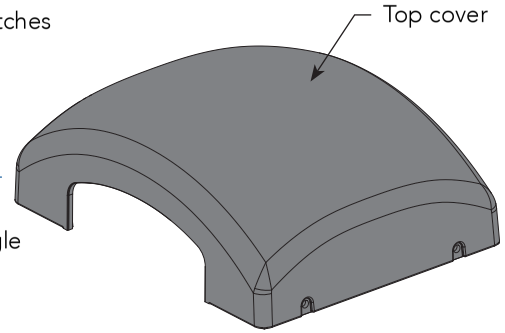

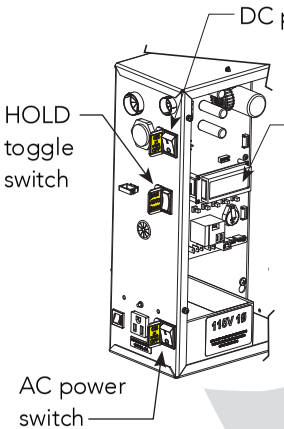

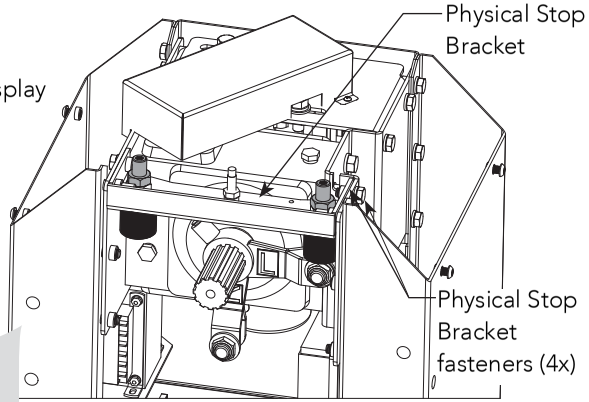

4 After GATE OPEN appears on the display, turn the DC power switch OFF.

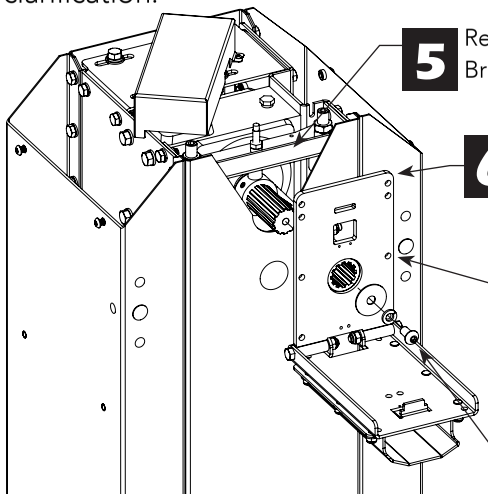

5 Remove Physical Stop Bracket (4 fasteners)

6 Position Breakaway Arm Bracket so the clamp opening faces up.

7 Slide the clamp onto the drive shaft. Align gear teeth as you slide clamp against chassis.

NOTE: You may need to loosen the collar bolt & nut to position the clamp. Re-tighten when spline properly set .

8 Secure clamp to drive shaft using the fasteners provided.

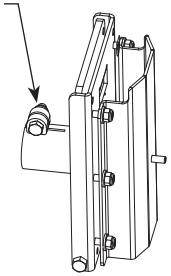

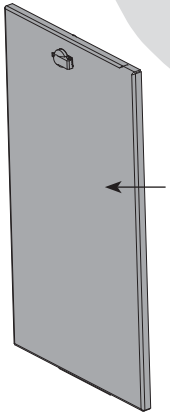

NOTE: Follow the video to feed wire harness through chassis, assemble barrier arm, connect lighting and program the gate operator.

StrongArmPark DC Components: Arm Chassis

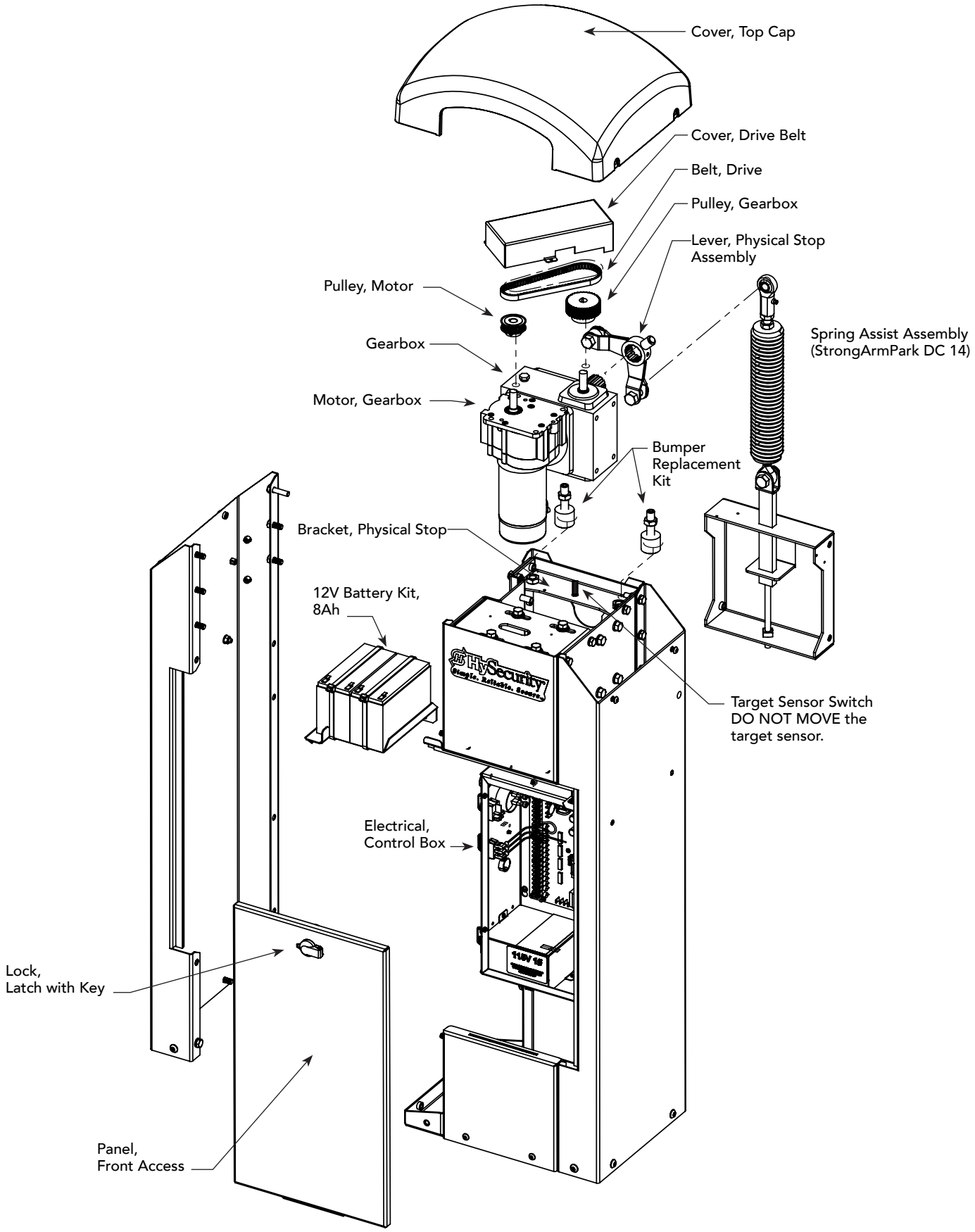

StrongArmPark DC Components: Control Box and Arm Configurations

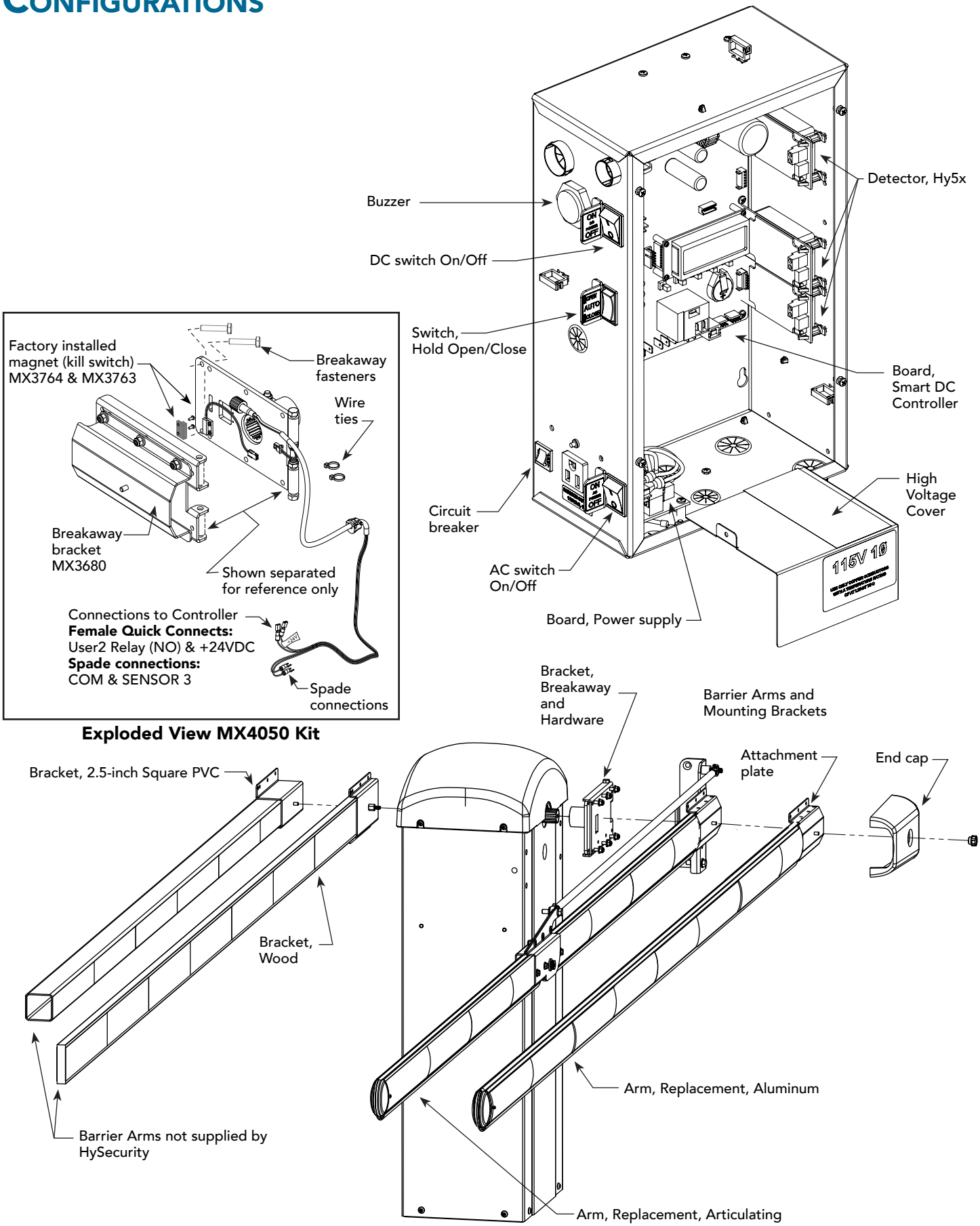

Exploded View MX4050 Kit

StrongArmPark DC Installer CheckList

The following list provides a high level overview of the tasks involved in installing the StrongArmPark DC gate operator. Take a moment to review the list and check off the items as you complete the install.

- ❑ Site Prep - concrete pad location/dimensions. Use template printed on the side of the sipping box.
- ❑ Make sure gate installation complies with ASTM F2200 Standard Specification for Automated Vehicular Gate Construction. And, install the supplied WARNING signs on both sides of the barrier arm and on its chassis. Signs must be viewable by incoming and outgoing vehicular traffic.
- ❑ Check for compliance with local codes, site conditions, and NEC standards.
- ❑ Install gate operator - (on concrete pad use four ½ - 13 x 3.5in long concrete wedge anchors.)
- ❑ Connect AC Power.
- ❑ Connect red wire to DC Power Switch.
- ❑ Turn DC Power ON.
- ❑ Connect all accessory devices.
- ❑ Check the Smart DC Controller software version. If necessary, upload the latest version from www.hysecurity.com. See Smart Touch Analyze and Retrieve Tool.
- ❑ Set the Close Timer (through the User Menu).
- ❑ Set barrier arm speed, if applicable (through Installer Menu). Refer to S.T.A.R.T. (Smart Touch Analyze and Retrieve Tool) in the Reference section.
- ❑ Set the dynamic reversing sensitivity, if needed (through Installer Menu).
- ❑ Set Relay User 2 to 28 or 29 and BA to 1 (breakaway arm) in the Installer Menu.
- ❑ Configure changes through the Installer Menu depending on the accessory devices that you have installed.
- ❑ Give a copy of the Important Safety Information and pertinent operator instructions to the end user. Show the end user how to:
  - Remove the barrier arm from the breakaway bracket.
  - Turn the power off and on to demonstrate learn limits after DC/AC cycles.
  - Adjust physical limit stops for barrier arm open and close positioning.
  - Turn the DC power switch off, which disengages the motor, and manually lift the barrier arm open.
- ❑ Take photographs of the completed installation site and save it in your business files.

(This page intentionally blank)

Safety Information

SAFETY MESSAGES

The safety messages below inform you about potential hazards that can result in injury. Safety messages specifically address level of exposure to operator and are preceded by one of four words: **DANGER, WARNING, CAUTION** or **NOTICE.**

DANGER

Indicates a hazardous situation which, if not avoided, **WILL** result in **DEATH** or **SERIOUS INJURY.**

WARNING

Indicates a hazardous situation which, if not avoided, **COULD** result in **DEATH** or **SERIOUS INJURY.**

CAUTION

Indicates a hazardous situation which, if not avoided, **COULD** result in **MINOR** or **MODERATE INJURY.**

NOTICE

Addresses practices not related to personal injury. Indicates damage to equipment is probable if the hazardous situation is not avoided.

COMMON INDUSTRIAL SYMBOLS

These international safety symbols may appear on product or in its literature to alert of potential personal injury hazards. Obey all safety messages that follow these symbols to avoid possible injury or death.

Symbol	Safety Hazard
	Attention - Take Notice
	Danger - Keep Away
	Entrapment Zone
	Possible Pinch Point

IMPORTANT SAFETY INSTRUCTIONS

Hazards, associated with automatic gates, can be reduced with proper site design, installation, and use. Installers, maintenance crews, and owners/users must read and follow the safety requirements found in HySecurity® product manuals.

It is important that only qualified installers handle installation of HySecurity Gate vehicular gate operators. A “qualified” installer has one of the following:

1. A minimum of three years experience installing similar equipment.
2. Proof of attending a HySecurity Technical Training seminar within the past three years.
3. Significant manufacturer endorsements of technical aptitude in gate operator installation and operation.

Underwriter Laboratories (UL) and the American Society for Testing and Materials (ASTM) are responsible for current safety standards and regulations regarding gate operators and automated gates. All aspects of gate installation must comply with the appropriate safety standard. For the most up-to-date ASTM F2200 Gate and Fence Standards, refer to www.astm.org. For UL 325 Safety Standard, refer to www.ul.com. Consult local government agencies for up-to-date rules and regulations as certain municipalities have established licensing, codes or regulations that regulate automated gate system design and installation.

GENERAL SAFETY INFORMATION

A gate operator is only a component in a gate system. The other parts of the gate system can include the gate, the external safety sensors, access controls, and vehicle detectors. To have a gate system that provides for safety, security, and reliable operation it is essential these components operate together as a system. It is the responsibility of the system designer and/or installer to ensure any safety or operational issues have been addressed.

⚠ WARNING!

To reduce the risk of injury or death:

1. **READ AND FOLLOW ALL INSTRUCTIONS.**
2. Never let children operate or play with gate controls. Keep the remote control away from children.
3. Always keep people and objects away from the gate. NO ONE SHOULD CROSS THE PATH OF THE MOVING GATE.
4. Test the gate operator monthly. The gate MUST reverse on contact with a rigid object or stop when an object activates the non-contact sensors. After adjusting the force or the limit of travel, retest the gate operator. Failure to adjust and retest the gate operator properly can increase the risk of injury or death.
5. Use the emergency release only when the gate is not moving.
6. KEEP GATES PROPERLY MAINTAINED. Read the user's manual. Have a qualified service person make repairs to gate hardware.
7. The entrance is for vehicles only. Pedestrians must use separate entrance.
8. SAVE THESE INSTRUCTIONS.

IDENTIFYING GATE OPERATOR CATEGORY AND UL 325 USAGE CLASS

The UL 325 standard covers gate operators. Within this safety standard several Usage Classes are described that define different types of installations where gate operators can be applied. Some operators are restricted in their usage application. Appropriate Usage Classes are shown in the Specifications.

Class I

Class I: Barrier arm gates are NOT Intended for use in a location of one to four single family dwellings or a parking area associated with one to four single family dwellings.

Class II

Class II: Intended for use in a commercial location or building such as a multi-family housing units (five or more single family units) hotels, garages, retail stores or other buildings servicing general public.

Class III

Class III: Intended for use in an industrial location or building such as factories or loading docks or other locations not accessible by the general public.

Class IV

Class IV: Intended for use in guarded industrial locations or buildings such as an airport security area or other restricted access location, not servicing general public, in which access is monitored by security personnel or via closed circuitry.

VEHICULAR TRAFFIC ONLY

WARNING!

This automatic gate operator is not designed nor is it intended for pedestrian traffic. Vehicular gate operators must by their nature be powerful to function reliably. This power can cause injury or death. Accordingly, direct all pedestrian traffic to a separate walk-through gate.

Install this gate operator only when:

- The operator is appropriate for the construction of the gate and the usage Class of the gate.
- All exposed pinch points are eliminated or guarded.
- Guarding is supplied for exposed rollers.

The operator is intended for installation only on gates used for vehicles. Pedestrians must be supplied with a separate access opening. The pedestrian access opening shall be designed to promote pedestrian usage. Locate the gate such that persons will not come in contact with the vehicular gate during the entire path of travel of the vehicular gate.

Permanently mounted controls intended for user activation must be located at least 1.83 m (6 ft) away from any moving part of the gate and where the user is prevented from reaching over, under, around or through the gate to operate the controls.

EXCEPTION: Emergency access controls only accessible by authorized personnel (e.g. fire, police, EMS) may be placed at any location in the line-of-sight of the gate.

The Stop and/or Reset button must be located in the line-of-sight of the gate. Activation of the reset control shall not cause the operator to start.

A minimum of two (2) WARNING SIGNS shall be installed, in the area of the gate. Each placard is to be visible by persons located on the side of the gate on which the placard is installed. HySecurity provides warning signs already applied to barrier arms and signs for attachment to the operator chassis.

For gate operators utilizing a non-contact sensor (Photo Eye):

- See instructions on the placement of non-contact sensors for each type of application.
- Care shall be exercised to reduce the risk of nuisance tripping, such as when a vehicle trips the sensor while the gate is still moving.
- One or more non-contact sensors shall be located where the risk of entrapment or obstruction exists, such as the perimeter reachable by a moving gate or barrier.

For a gate operator utilizing a contact sensor (Edge):

- One or more contact sensors shall be located where the risk of entrapment or obstruction exists, such as at the leading edge, trailing edge, and postmounted both inside and outside of a vehicular horizontal slide gate.
- A hardwired contact sensor shall be located and its wiring arranged so that the communication between the sensor and the gate operator is not subjected to mechanical damage.
- A wireless device such as one that transmits radio frequency (RF) signals to the gate operator for entrapment protection functions shall be located where the transmission of the signals are not obstructed or impeded by building structures, natural landscaping or similar obstruction. A wireless device shall function under the intended end-use conditions.

USE OF VEHICLE DETECTORS

Use of vehicle detectors (loop detectors) is strongly encouraged to prevent damage to vehicles caused by barrier arms closing on them. This is not considered to be a safety item as vehicle detectors cannot provide protection to pedestrians. In some situations, photoelectric devices may be used as vehicle detectors, but should be wired accordingly.

GATE CONSTRUCTION AND SAFETY

Gate construction plays a very important role in ensuring the safety of any automated gate system. The standard for gate construction is ASTM F2200. Below are key areas to address in gate design for safety. For complete information consult the standard. Copies of the standard are available at:

https://www.astm.org/Standards/F2200.htm.

Another source of information is available from DASMA, the Door and Access System Manufacturer's Association. The Association publishes Technical Data Sheets, one of which concerns ASTM F2200. For more information, see:

http://www.dasma.com/PDF/Publications/TechDataSheets/OperatorElectronics/TDS370.pdf.

General Requirements for gate construction:

- Gates shall be constructed in accordance with the provisions given for the appropriate gate type listed. Refer to ASTM F2200 for additional gate types.
- Protrusions shall not be permitted on any gate. Consult ASTM F2200 for exceptions.
- Gates shall be designed, constructed and installed such that their movement shall not be initiated by gravity when an automatic operator is disconnected.
- For pedestrian access in the vicinity of an automated vehicular gate, a separate pedestrian gate shall be provided. The pedestrian gate shall be installed in a location such that a pedestrian shall not come in contact

with a moving vehicular barrier arm. A pedestrian gate shall not be incorporated into an automated vehicular gate panel.

- Any non-automated gate that is to be automated shall be upgraded to conform to the provisions of this specification.
- This specification shall not apply to gates generally used for pedestrian access and to vehicular gates not to be automated.
- Any existing automated gate, when the operator requires replacement, shall be upgraded to conform to the provisions of this specification in effect at that time.

EXTERNAL ENTRAPMENT PROTECTION SENSORS

The following external sensors may be used:

- Contact sensors, such as edge sensors
- Non-contact sensors, such as photo eyes

Site designer or installer can choose either photo eyes, edge sensors, or a combination of these devices. Whatever devices are used, protection in the closing direction of armtravel must be provided.

PHOTO EYES: One or more non-contact sensor (photo eyes) shall be located where entrapment risk or obstruction exists, such as perimeter reachable by a moving gate.

Care shall be exercised to reduce the risk of nuisance tripping, such as when a vehicle trips the sensor while the gate is moving.

EDGE SENSORS: One or more contact sensors (edge sensors) shall be located at leading edge, trailing edge, and post-mounted, both inside and outside of a sliding gate.

One or more contact sensors shall be located on the inside and outside leading edge of a swing gate. Additionally, if the bottom edge of a swing gate is greater than 6"(152mm) but less than 16"(406mm) above the ground at any point in its arc of travel, one or more contact sensors shall be located on the bottom edge.

SENSOR SECURITY: A hard-wired contact sensor shall be located and its wiring arranged so that communication between sensor and gate is not subjected to mechanical damage.

SENSOR FUNCTION and COMMUNICATION: A sensor that transmits its signal to gate operator must be located so its signal is not impeded by building structures or other obstructions. All sensors must be installed so that they function as intended for end-use conditions.

UL 325 LISTING: Edge sensors and photo eyes must be tested and labeled as "Recognized Components" or otherwise certified to UL 325 requirements in order to be deemed acceptable for use in a gate operator. Study Important Safety Instructions and consider your specific installation to determine where greatest entrapment risks exist. Locate edge sensors and/or photo sensors accordingly. Be certain that a sufficient number of sensors are used so that pedestrians are protected from entrapment in arm travel and all hazard areas are fully protected. Most HySecurity gate operators require external entrapment sensors that utilize Normally Closed (NC) contact means of monitoring. HySecurity gate operators utilizing the SmartCNX Controller

⚠ CAUTION

A contact or non-contact sensor is also required to protect against possible entrapment if gate opens to a position less than 16 inches from any object, such as a post or wall.

require external entrapment sensors that have a 10k Ohm or 4-wire pulsed monitoring scheme. Refer to UL website at www.ul.com for most up-to-date list of gate operator safety standards (UL 325). Refer to www.astm.org for a complete list of ASTM F2200 Gate and Fence Standards.

HySecurity Vertical Barrier Arm Safety and Traffic Control

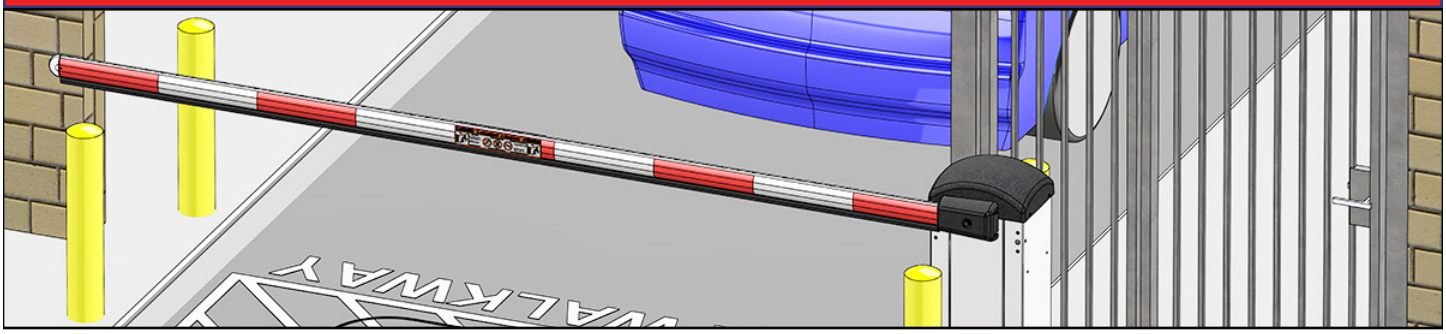

ARM INSTALLATION

Do not install the operator where arm moves within 16 inches of a rigid object or within 10 feet of high power wires when the barrier arm is raised.

TRAFFIC SPEED

The acceptable speed through the gate entry or exit is 5 MPH. To help regulate traffic, speed limit signs, hazard stripes, and speed bumps may be utilized.

USER RESPONSIBILITY

The user is responsible for gate safety and should familiarize themselves with all aspects of gate operation, including:

- hardware operation
- entrapment protection
- electrical and mechanical safety
- arm reversing functions and testing
- edge contact sensors
- photoelectric eye sensors
- gate operator accessories (alarms, radio, etc.)

⚠ WARNINGS FOR BARRIER ARM SAFETY

- **The gate system should be installed so that the person operating the gate can observe the entire movement of barrier arm.**
- **The gate operator controls should be located at least 6 feet away from the barrier arm to prevent controls being used by an operator while in contact with the barrier arm.**
- **Emergency access controls must be protected from unauthorized use and placed so that emergency personel can access them.**
- **Keep all persons and children away from the gate entry/exit and all hazrad areas.**
- **Arm barriers are meant ONLY for vehicles; bicycles and motorcycles are NOT permitted through the barrier arm gate system.**
- **A separate and clearly marked entry/exit must be provided for pedestrian traffic to prevent contact with the barrier arm.**
- **All electrical connections must be made in accordance to local electrical codes.**
- **To avoid unauthorized use of the controls, install security features on the barrier arm operator, such as a lock.**
- **When manually operating gate, ensure that no vehicles or pedestrians are in the gate area.**

HySecurity Vertical Barrier Arm Safety and Traffic Control

High levels of force are generated by moving traffic barrier arms. Ensure warning signs and safety devices are properly installed and operated to address the following hazards:

- Pinch points
- Entrapment areas
- Overhead power lines
- Traffic speed

Refer to the list below for safety features available for the installation of a barrier arm gate system. Refer to the drawings on the next page for a visual reference of these features.

WARNING!

The primary hazard for barrier arms is the barrier arm striking a person as it is lowered, so any measures to prevent persons from entering the area under the arm will be most effective in ensuring safety. A non-contact photo-eye sensor (see below) is recommended for maximum protection as it will prevent the arm lowering if the beam is interrupted by the presence of a person under the arm.

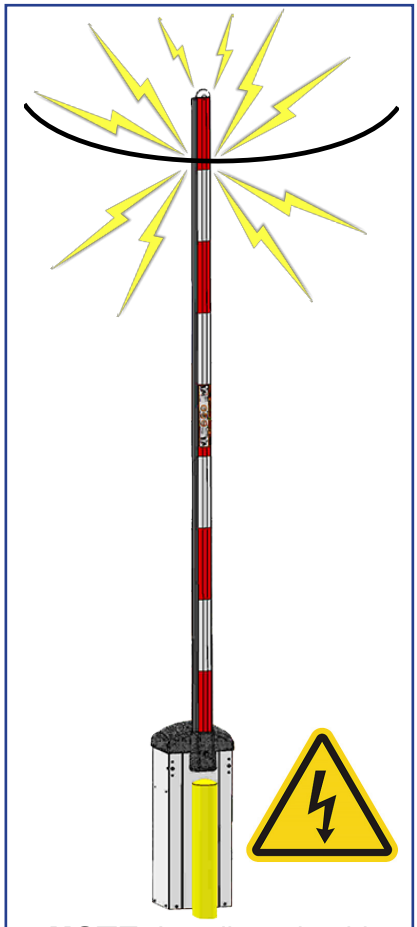

NOTE: Installers should ensure the barrier arm does not contact power wires above the install location when in the open position.

1 Non-Contact Sensor (Photo Eye)

Located directly below the arm, this sensor will minimize the potential for a barrier arm to impact a vehicle not sensed by a ground loop.

2 Loop Sensor

Loop sensors sense the prescence of moving vehicles ONLY and prevents the barrier arm from impacting vehicular traffic. Configuration and placement depends on application. Loops do not sense persons.

3 Traffic Light

Traffic lights help control traffic flow through the gate.

4 Separate Pedestrian Walkway

A pedsestrian walkway separate from gate entry is REQUIRED, and serves to prevent pedestrians from coming into contact with the arm.

5 LED Lights on Barrier Arm

Arm mounted LED lights allow the arm and its position to be easily seen in dark environments.

6 Speed Bump

A speed bump may help regulate traffic speed through the gate.

7 Pedestrian Warning and Hazrad Stripes

This warning indicates pedestrians are not allowed to enter through the gate where they may come into contact with the barrier arm. Warnings should be positioned to be seen from both sides of the gate.

8 Arm Warning Sign (Both Sides of Arm)

This warning indicates the hazards of standing in the way of a barrier arm and should be applied to both sides of the arm.

9 Speed Limit Sign

A speed limit sign may help regulate traffic speed through the gate opening.

10 Gate Operator Warning Sign

This warning indicates the hazards of standing in the way of a barrier arm and should be applied to both sides of the gate operator chassis so it is visible to traffic in both directions.

HySecurity Vertical Barrier Arm Safety and Traffic Control

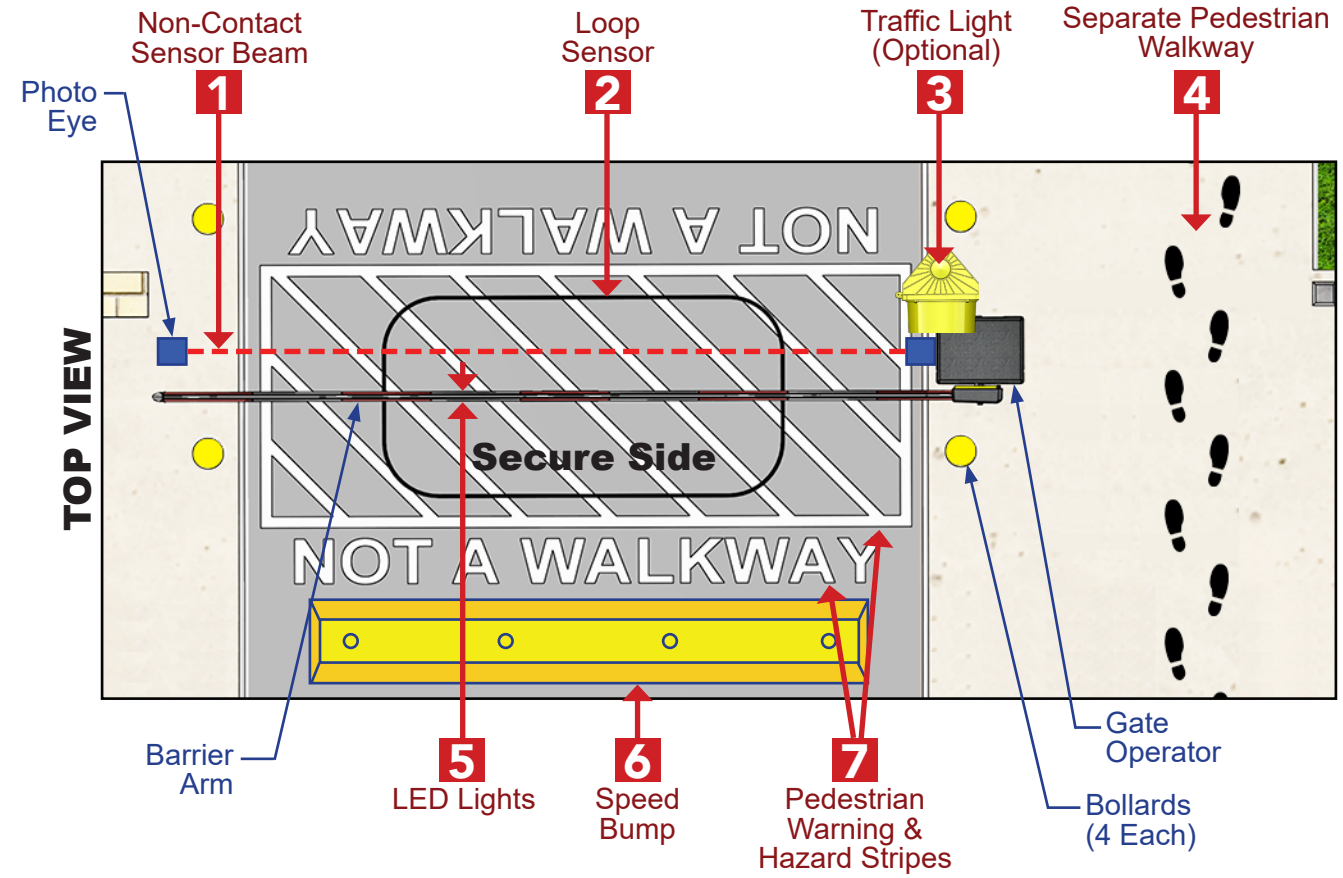

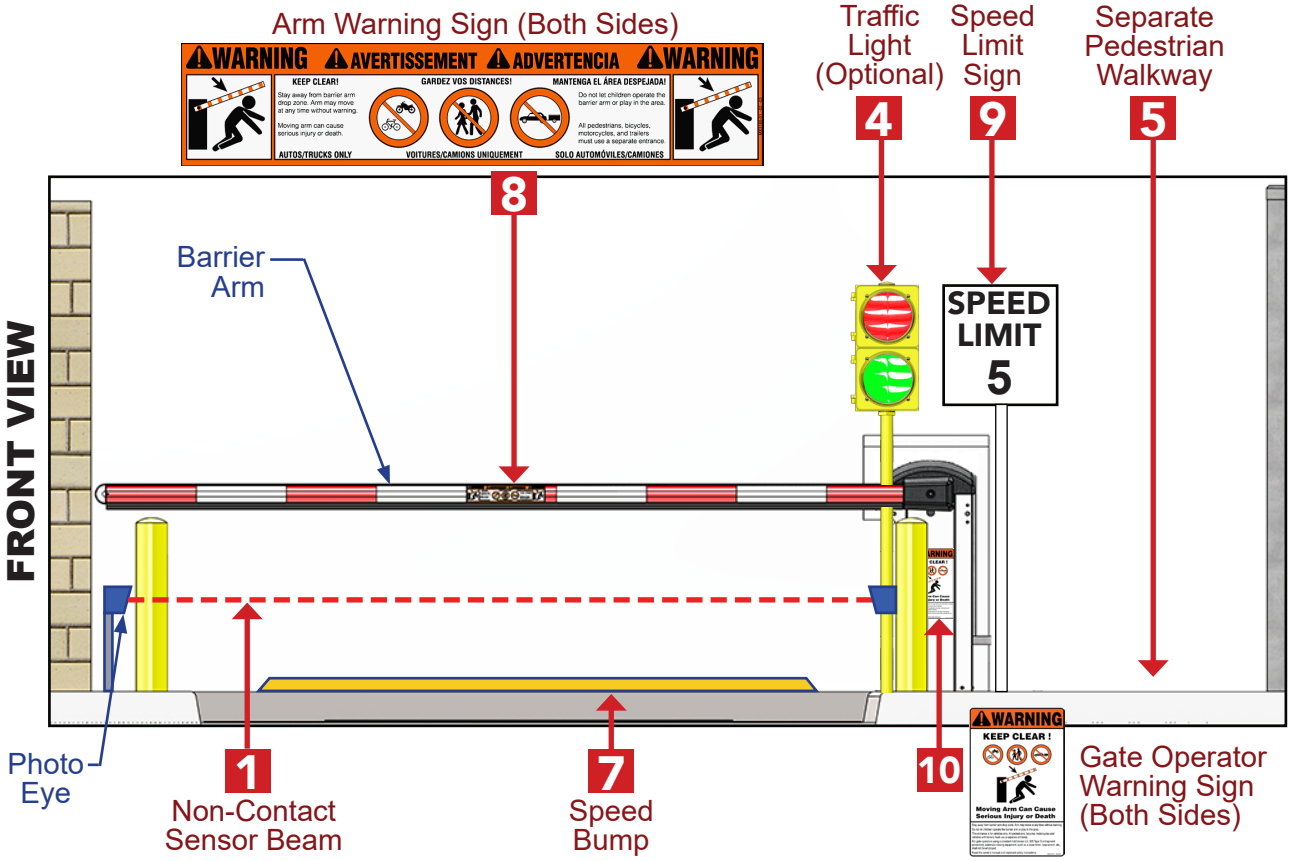

HySecurity Vertical Barrier Arm Safety and Traffic Control

The following sensors have been shown in testing to provide the best performance when installed with HySecurity operators. HySecurity supports installers who install recommended sensors. "Compatible Sensors" are still certified to meet UL 325 6th edition installation with HySecurity operators. Contact the sensor manufacturer for specific recommendations for use.

CAUTION **All protection sensors must have NC sensor outputs and be wired to the SENSOR COM terminal for monitoring and powering purposes. Depending on software version, the sensor becomes powered when the gate operator's motor runs or is always powered when the operator is connected to AC power.**

HySecurity Compatible Sensors				
	Mfg. Part #	**Mfg.**	**Details**	**Hysecurity Part #**
Photo Eyes (Retroreflective)	E3K-R10K4-NR	Omron	40 ft max range limit	MX000999
	NIR-50-325	EMX	45 ft max range limit	
	IRB-RET	EMX	53 ft max range limit	
	E-931-S50RRGQ	Seco-Larm	46 ft max range limit	
Photo Eyes (Thru-Beam)	IRB-MON	EMX	65 ft max range limit	MX3990
	E-960-D90GQ	Seco-Larm	90 ft max range limit	
Edge Sensors	Sentir Series	ASO Safety	Channel mount, high profile Channel mount, low profile Round, wraparound Square, wraparound	AS1502-0440-05 AS1502-0430-05 AS1501-0760 AS1501-0790
	CPT210-2U-#-T2	Miller Edge	10k resistor termination (replace # with length requirement in feet)	
Edge Sensor, Converters (10K to NC Contact)	Hy2NC	HySecurity	2-channel edge converter	MX4018
Edge, Wireless Kits	iGAZE RE Kit	Transmitter Solutions	50 ft line of sight max range limit	
	WEL-200 (kit with receiver and transmitter)	EMX	200 ft line of sight max range limit	

For more information visit Gate Safety at www.hysecurity.com/gatesafety or
see latest operator manual at www.hysecurity.com/contact-us/technical-support/installation-manuals

ELECTRICAL SAFETY

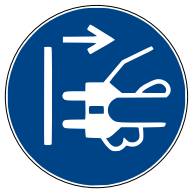

- Turn gate operator and all circuit breakers OFF before performing maintenance on the gate operator or making contact with output receptacles.

- Never insert any objects into output receptacles during operation. The possibility exists of electrical shock, electrocution, or death.
- Never let power wires lay in water.
- Never use damaged or worn wire when connecting equipment. Inspect for cuts in the insulation.

- Never grab or touch a live power cord or cable with wet hands. The possibility exists of electrical shock, electrocution or death.
- Always make certain that proper power has been selected for the job. See Cable Selection Chart in this manual.

GROUNDING SAFETY

- Always make sure that electrical circuits are properly grounded to a suitable earth ground (ground rod) per the National Electrical Code (NEC) and local codes. Severe injury or death by electrocution can result from operating an ungrounded operator.
- Never use gas piping as an electrical ground.

BATTERY SAFETY

HySecurity operators use sealed Absorbed Glass Mat (AGM) batteries and HySecurity highly recommends replacing used batteries with new AGM-type batteries.

CAUTION

Batteries used with HySecurity gate operator contain materials considered hazardous to environment. Proper battery disposal is required by federal law. Refer to *Hazardous Waste Regulations* federal guidelines.

To reduce risk of fire or injury to persons:

- Observe polarity between batteries and charging circuit.
- Never mix battery sizes, types, or brands. Charging circuit on HySecurity DC operators is designed for AGM-type batteries, not flooded lead acid-type batteries.

- Exercise care in handling batteries. Be aware metal found in rings, bracelets, and keys can conduct electricity, short batteries, and cause potential injury.

- Do not open or mutilate batteries. Battery cells contain corrosive materials which may cause burns and other injuries. Material within batteries is toxic.

- Always dispose of batteries properly. Do not place batteries in fire. Battery cells may explode. Follow federal guidelines for proper disposal of hazardous waste.
- Always keep battery cables in good working condition. Repair or replace all worn cables.

- Replace batteries according to instructions found in *DC Battery Replacement*.
- Do not charge frozen battery. Battery can explode. If frozen, warm the battery to at least 61°F (16°C).

ENVIRONMENTAL SAFETY/ HAZARDOUS MATERIALS AND PROPER DISPOSAL

Decommissioning is a controlled process used to safely retire a piece of equipment that is no longer serviceable. If the equipment poses an unacceptable and unrepairable safety risk due to wear or damage or is no longer cost effective to maintain (beyond life-cycle reliability) and is to be decommissioned (demolition and dismantlement), be sure to follow rules below.

- Do not pour waste or oil directly onto the ground, down a drain or into any water source.
- Contact your country's Department of Public Works or recycling agency in your area and arrange for proper disposal of any electrical components, waste or oil associated with this equipment.
- When the life cycle of this equipment is over, remove battery and bring to appropriate facility for lead reclamation. Use safety precautions when handling batteries that contain sulfuric acid.
- When the life cycle of this equipment is over, it is recommended that the frame and all other metal and plastic parts be sent to a recycling center.

Metal and plastic recycling involves the collection of metal and plastic from discarded products and its transformation into raw materials to use in manufacturing a new product.

Recyclers and manufacturers alike promote the process of recycling metal and plastic. Using a metal and plastic recycling center promotes energy cost savings.

WIND LOAD FACTORS

Wind load is not as much of a factor when considering using a barrier gate for a particular site instead of a slide or swing gate. However, when installing a barrier arm gate in a high wind area, Hysecurity suggests trhe following:

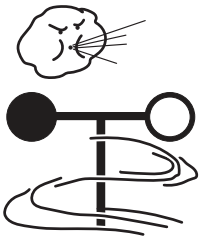

- Gate arms should be lowered during high wind conditions to avoid damage to the arm.
- Metal hardware (rather than nylon) should be used to affix the arm to the operator.

MAINTENANCE OF GATE SYSTEMS

To keep your automated gate system performing both safely and reliably it is important to ensure that the components of the system are functioning properly.

At least monthly:

- Disconnect the gate operator and manually move the barrier arm through its range of travel. Note any unusual noises or areas of binding. The arm should travel smoothly and quietly throughout its range. If it does not, contact a gate professional to correct the problem.
- Reconnect the gate operator and perform the following tests:
  - With the arm closing, block any photo eyes and/or depress any safety edges used to protect the close direction. The gate should stop and reverse direction.
  - Using a suitable obstruction in the path of the arm (a solid, immovable object), close the arm until it contacts the obstruction. The arm should stop and reverse direction.

Manual Release

NOTICE: Before attempting a manual release, make sure the barrier arm is not in motion.

Make sure and instruct all users how to move the gate manually. Use the Hold Open toggle switch to raise the barrier arm or, in the case of complete AC & DC power loss, turn off both AC and DC power switches and lift the barrier arm to open it.

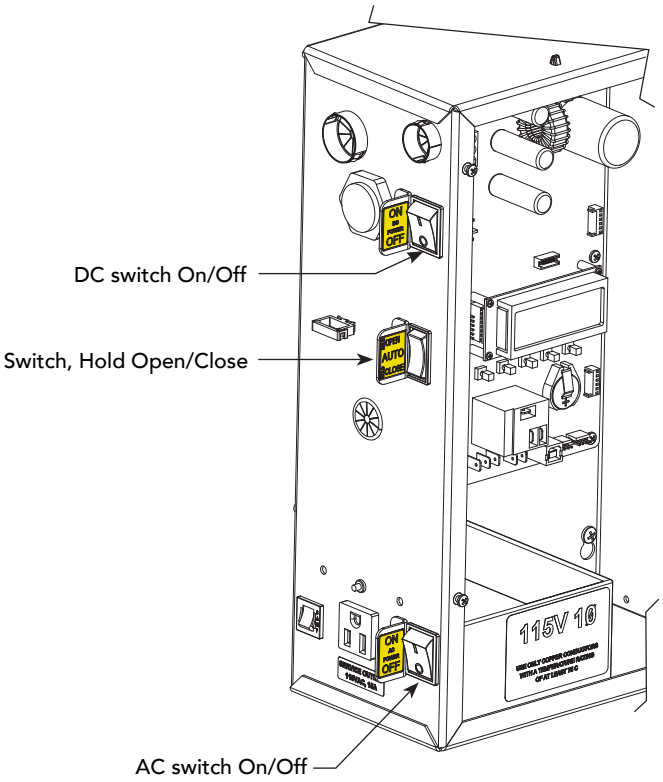

Breakaway Arm Feature

Every StrongArmPark DC operator comes equipped with a breakaway arm bracket, which lessens damage to the operator and reduces the cost of arm replacement due to vehicle hits.

For more information about installing the breakaway arm bracket, review the *StrongArmPark DC Installation Instructions*.

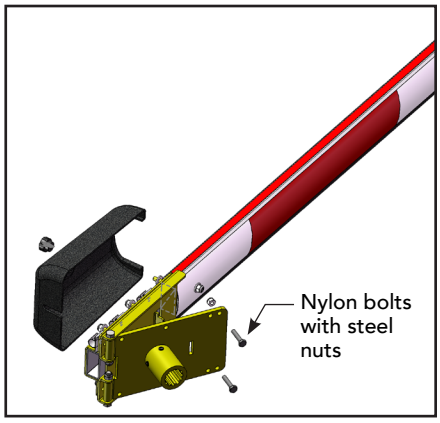

Dynamic Reversing Sensor

The StrongArmPark DC provides an integral feature to help prevent entrapment. While closing, if the dynamic reversing sensor is tripped twice within a specific period of time, it enters safe mode. The operator stops barrier arm travel. For more information, see *Adjusting the Dynamic Reversing Sensor.*

How to wire the operator is presented in the Installation Instructions, but detailed information about the earth and equipment ground, wiring to AC power, DC power considerations and changing the batteries are described in this section.

Installing the Earth Ground

An earth ground refers to the grounding rod and accompanying equipment ground which need to be installed to safeguard against potential electrical shock and damage to personnel and equipment.

DANGER

The potential for lightning discharge exists with all gates, fences and gate operators. National Electric Code (NEC) - Article 250 requires a separate earth ground in addition to the required equipment ground.

HySecurity recommends grounding the operator with a separate earth ground rod (or a similar device in the case of crash products) to shield the operator against electromagnetism and other electrical signals that may cause, erratic operation with, or damage to, the Smart DC Controller and other electrical parts.

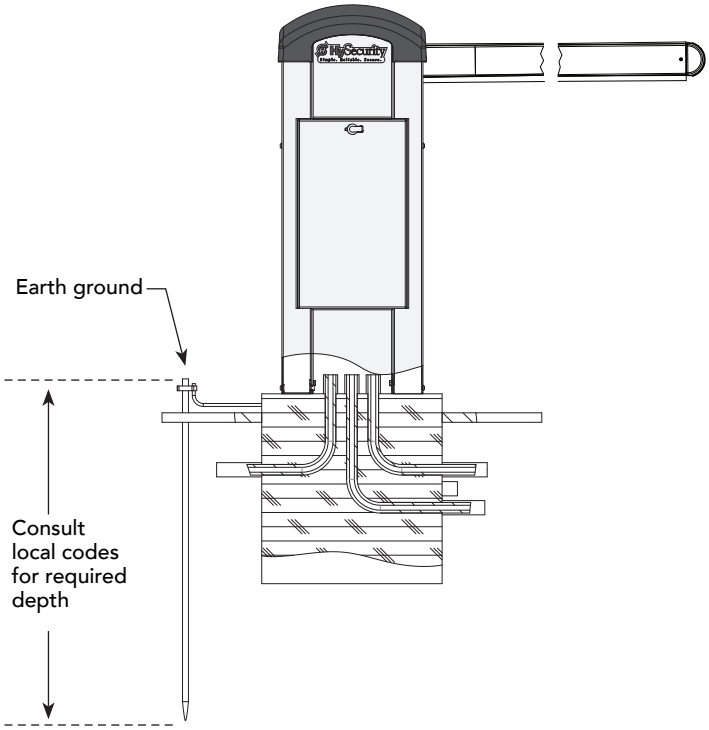

For earth grounding requirements in the U.S.A., refer to the National Fire Protection Association (NFPA) 780 - Standard for the Installation of Lightning Protection Systems. Highlights of the standard include:

- The ground rod must be UL listed copper-clad steel, solid copper, hot-dipped galvanized steel, or stainless steel. Minimum requirements: ½ inch (13 mm) diameter and 8 feet (244 cm) in length.
- The ground rod is driven into the earth (refer to local codes for proper depth requirements).
- The ground rod is electrically bonded to the chassis with a single length of un-spliced 6AWG copper wire less than 3 feet (91cm) long. Due to the large concrete foundation on crash products, make the necessary adjustments to accommodate for earth ground requirements.
- Local jurisdictions may impose other requirements above the NEC, Article 250 and NFPA 780. Consult the local codes and regulations regarding requirements in your area.

NOTICE: Properly grounding the gate operator is critical to gate operator performance and the life of its electrical components. Use sufficient wire size during installation. If you do not ground the operator with a separate earth ground, you risk voiding the HySecurity Warranty.

Wiring AC Power

The StrongArmPark DC has separate Installation Instructions that explain how to connect to AC power. For reference purposes, the same information is provided below.

Size the primary wires. Consider the voltage and length of the wire run from the main power panel. Make sure you have set the voltage selector switch to the proper voltage.

DANGER

Turn OFF AC power at the source (circuit breaker panel) before accessing the wires in the StrongArmPark DC. Follow facility Lock Out/Tag Out procedures. Make sure all power switches are in the OFF position. Follow all electrical code standards and regulations.

CAUTION

Wiring of gate operators must conform to NFPA and NEC standards and comply with all local codes. When the installation is compliant and complete, turn on AC power at the source and power module.

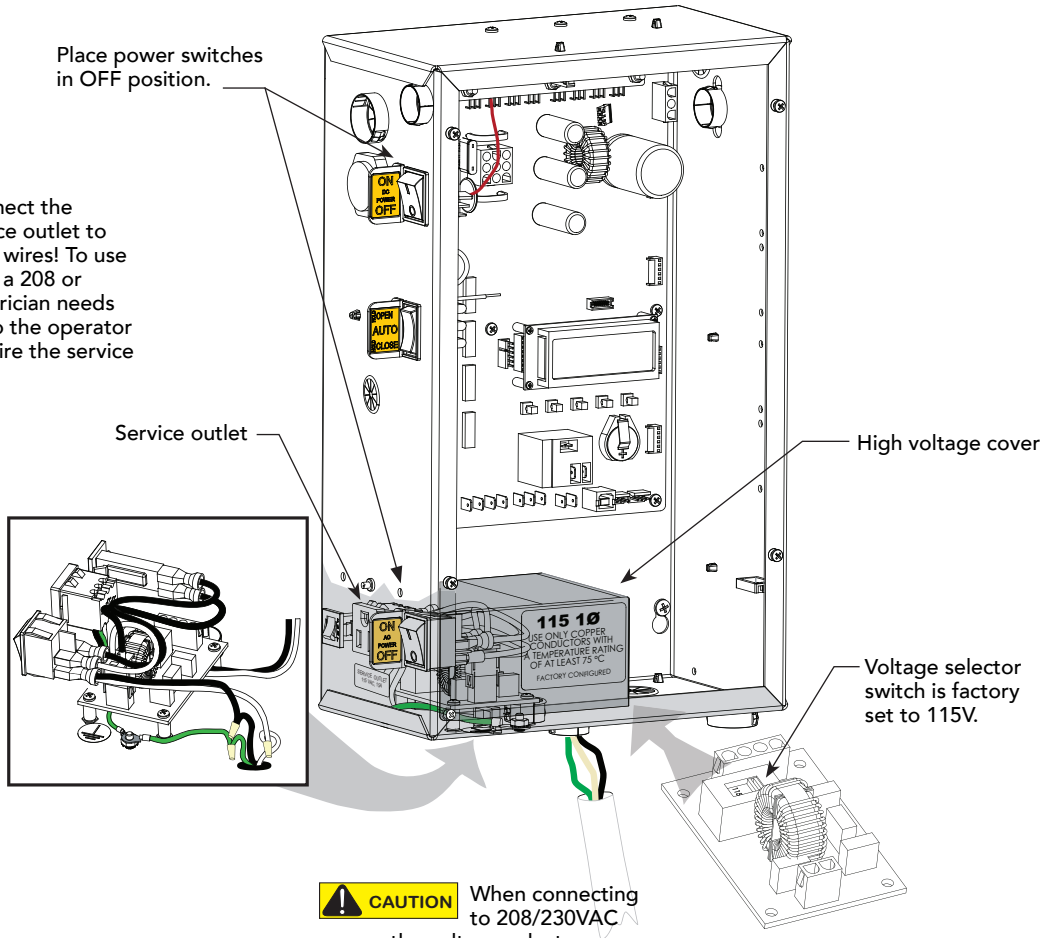

WARNING DO NOT connect the 115VAC service outlet to 208 or 230VAC power supply wires! To use the 115VAC service outlet on a 208 or 230VAC installation, the electrician needs to run an extra neutral wire to the operator from the power source and wire the service outlet per code.

CAUTION When connecting to 208/230VAC power, the voltage selector switch on the AC power board must be moved to the 230V position or damage to the operator will occur and void the Warranty. The label on the high voltage cover must be changed to state 230V.

Wiring 115VAC Power

For standard 115VAC power connection:

Verify AC power supply wires and low voltage (12V & 24V accessory power wires) run through two separate conduits. The higher voltage from the AC power supply may cause interference and anomalies in StrongArmPark DC operation if the high and low voltage wires are routed through the same conduit.

Maximum gate operator current draw is 3 Amps on a dedicated 115VAC circuit (20A dedicated circuit is recommended).

Make sure proper wiring is being used. The following table shows the maximum allowable wire run from the power source to the operator for various wire sizes.

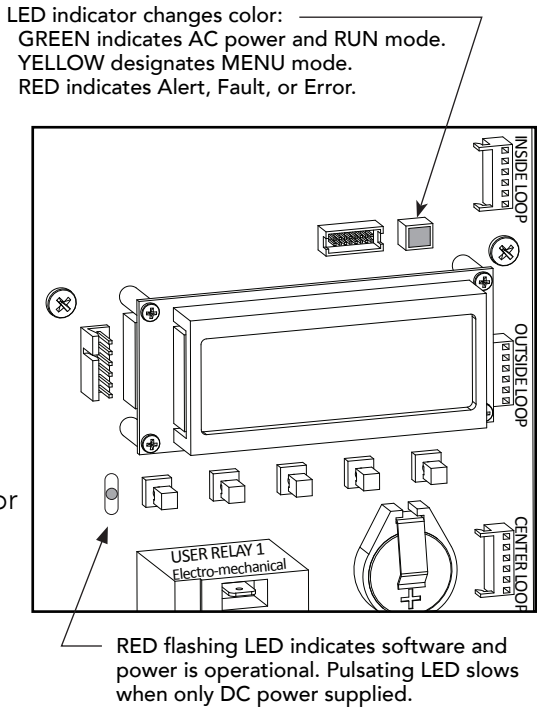

StrongArmPark DC 115VAC: Wire Gauge versus Run			
AC Power	**14 Gauge Wire**	**12 Gauge Wire**	**10 Gauge Wire**
One operator 115V	730 ft (223 m)	1200 ft (366 m)	1900 ft (579 m)
Two operators 115V	460 ft (140 m)	750 ft (228 m)	1160 ft (354 m)

NOTE: Table 2 assumes a dedicated circuit with an accessory power load up to 2A. Additional loads require that the wire size be increased or the distance of the run be decreased.

To connect to 115VAC power, take the following steps:

1. Make sure the AC power is turned off at its source and the DC and AC power switches on the operator are in the off position.
2. Access the input power wires and service outlet wires by removing the two Phillips-head screws that secure the high voltage junction box cover.
3. The service outlet wires are solid copper and are labeled and bound together to keep them separate from the AC power switch wires.
4. Wire nut or crimp bond the power supply wires to the black and white lead wires coming from the AC power switch (no label).
5. Wire nut or crimp bond the equipment ground wire to the green ground wire in the junction box.
6. To activate the 115VAC service outlet, include the black and white outlet lead wires and the green ground wire in the connections made above.
7. Neatly organize all wire connections and replace the high voltage junction box cover. Secure it with the two Phillips-head screws.

Wiring 208/230VAC Power

CAUTION

All StrongArmPark DC operators are shipped from the factory as 115VAC units. When connecting to 208/230VAC power, the voltage selector switch on the AC power board must be moved to the 230V position or damage to the operator will occur and void the Warranty

For the 208/230VAC power connection:

- Verify AC power supply wires and low voltage (12V & 24V accessory power wires) run through two separate conduits as discussed in Wiring 115VAC Power.
- Maximum gate operator current draw is 1.5 Amps on a dedicated 208/230VAC circuit (20A dedicated circuit is recommended).
- Make sure proper wiring is being used. See the chart below.

StrongArmPark DC 208/230VAC: Wire Gauge versus Run			
AC Power	**14 Gauge Wire**	**12 Gauge Wire**	**10 Gauge Wire**
One operator 208/230V	2095 ft (639 m)	3350 ft (1021 m)	5300 ft (1615 m)
Two operators 208/230V	1465 ft (446 m)	2350 ft (716 m)	3750 ft (1143 m)

To connect to 208/230VAC power, take the following steps:

1. Make sure the AC power is turned off at its source and the DC and AC power switches on the operator are in the off position.
2. Remove the High Voltage Protection cover by unscrewing the two Phillips-head screws that secure it.
3. Toggle the voltage selector switch from 115V to 230V.
4. Access the input power wires by removing the two Phillips-head screws that secure the High Voltage Junction Box Cover.
5. Wire nut or crimp bond the power supply wires to the black and white lead wires coming from the AC power switch.
6. Wire nut or crimp bond the equipment ground wire to the green ground wire in the junction box.

DANGER

To use the service outlet with 208/230VAC, a separate neutral wire (white) must be run from the power source. Make sure the incoming power wires are sized appropriately to support the load expected on the service outlet. Follow guidelines per the National Electrical Code Article 250.

7. Neatly organize all wire connections and secure the Junction Box Cover with the two Phillips-head screws.
8. Place the 208V or 230V 1Ø label on the Junction Box Cover over the 115V 1Ø label.

Connecting DC Power

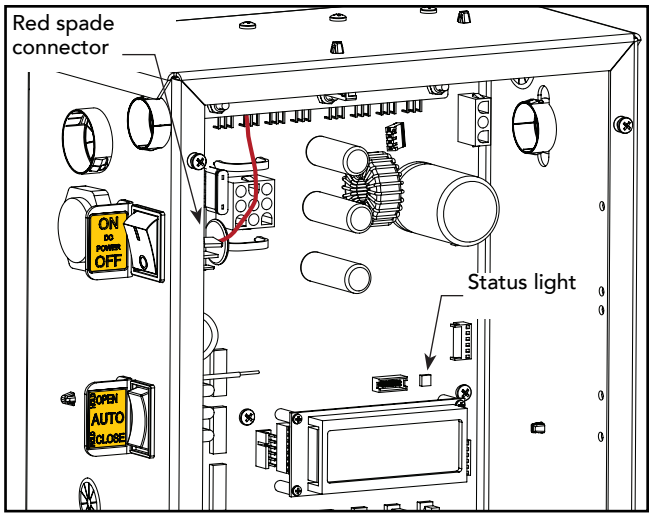

To connect the DC power:

1. Turn off the DC and AC power switches.
2. Slide the plastic cover off the control box.
3. Attach the red spade connector to the battery terminal on the DC power switch.

Turning the Power Switch ON

When both DC and AC power switches are turned ON:

- The barrier arm travels open and initiates a target search. StrongArmPark DC senses the arm position and establishes its open and close limits. No physical limit switches exist. Limits are automatically learned and remain intact even if AC power is lost and the batteries are fully drained. The only exception occurs when factory defaults are reinstated, or the Smart DC Controller is replaced. For more information about Learn Limits and Menu modes, refer to *Display & Menu Options on page 27*.
- A green status LED appears on the Smart DC Controller and remains static. The status light appears above the display and indicates that the processor is receiving power.

NOTE: The Smart DC Controller can be powered when either switch is turned on. However, the operator is a DC-powered unit and runs on its batteries. If the DC power switch is off, the operator will not function (even though the AC power switch is on). When the operator is connected to AC power and the both AC and DC power switches are turned on, the charge level of the battery is being monitored and maintained. On a solar-powered operator, the AC power switch connects and disconnects the DC power from the solar panels.

The flashing red indicator light next to the OPEN button on the Smart DC Controller is considered the heart beat of the system. It indicates that the electronics board is receiving power. When AC power is lost, the rate of flashing slows down. Another indicator light, above the display, is multi-colored and corresponds to the action that the operator is performing:

- Green - the operator is stopped.
- Flashing yellow - the operator is running.
- Red - the operator has experienced an error.
- Not lit - AC power is lost. Pressing the SHOW LEDs button indicates which inputs, if any, are active. Refer to Figure 4-2 for the SHOW LEDs location on the board.

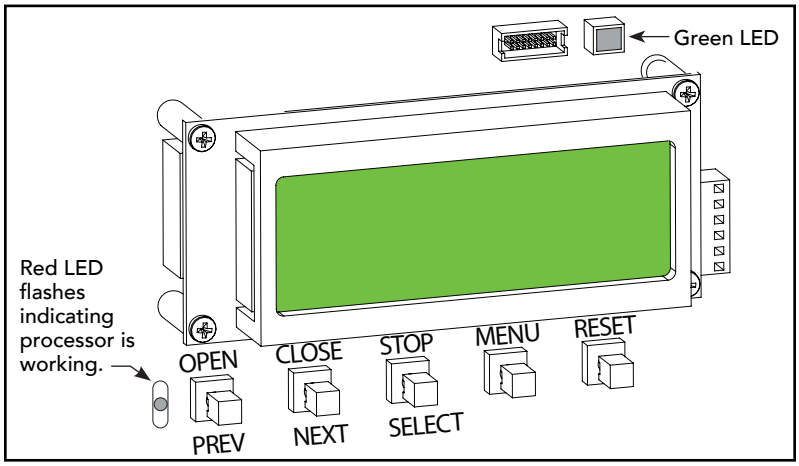

Display & Menu Options

Highly sophisticated software provides three different modes of operation: *run*, *program*, and *fault*. How to navigate using the Smart DC Controller (SDC) keypad, interpret status display codes and program the operator is found in this section.

Initial Setup

Once you have completed the installation, attached accessories and turned power ON, you're ready to program the operator. Two different approaches exist:

- Connect a laptop computer to the serial (RS-232 or USB) port, check for the most current software version and then set the operator menu configurations via the START software. See *Smart Touch Analyze and Retrieve Tool (S.T.A.R.T.) on page 77*.

  NOTE: Use a laptop computer at your place of business to conveniently download the free START software and most current software version from www.hysecurity.com before heading out into the field. This makes it easy to adjust settings using a laptop.

- Manually navigate through the User and Installer Menus using the SDC keypad. The instructions for performing this second option are provided in this section.

Understanding the Display and Keypad

The SDC display and keypad provide access to the operator's sophisticated software and functionality.

Three different operational modes exist:

- Run Mode - gate is operational, awaiting commands.
- Menu Mode - motor disengages and operator commands are ignored. Data entry, menu navigation, and menu selection can be accomplished via the keypad or through a S.T.A.R.T. software connection using the RS-232 or USB port.
- Fault Mode - alerts, faults, or errors appear on the display. Some errors or faults can be reset with the Reset button while more serious faults require additional troubleshooting. Faults indicate a need for diagnosis and resolution. Refer to *"Troubleshooting"*.

Display in Run Mode: Stop, Open, or Close

The keypad lets you navigate, change, or clear the information in the display menus. The singular use of these keys is dependent on the operator mode.

The buttons with text above and below have two functions. Use these buttons to enter operating commands or navigate through the User and Installer Menus.

Menu Mode

In Menu Mode, the motor disengages and operator commands are ignored. Data entry, menu navigation, and menu selection can be accomplished using the buttons on the Smart DC Controller keypad.

NOTE: Menu Mode automatically returns to Run Mode if no activity (i.e. key presses) occurs for two minutes.

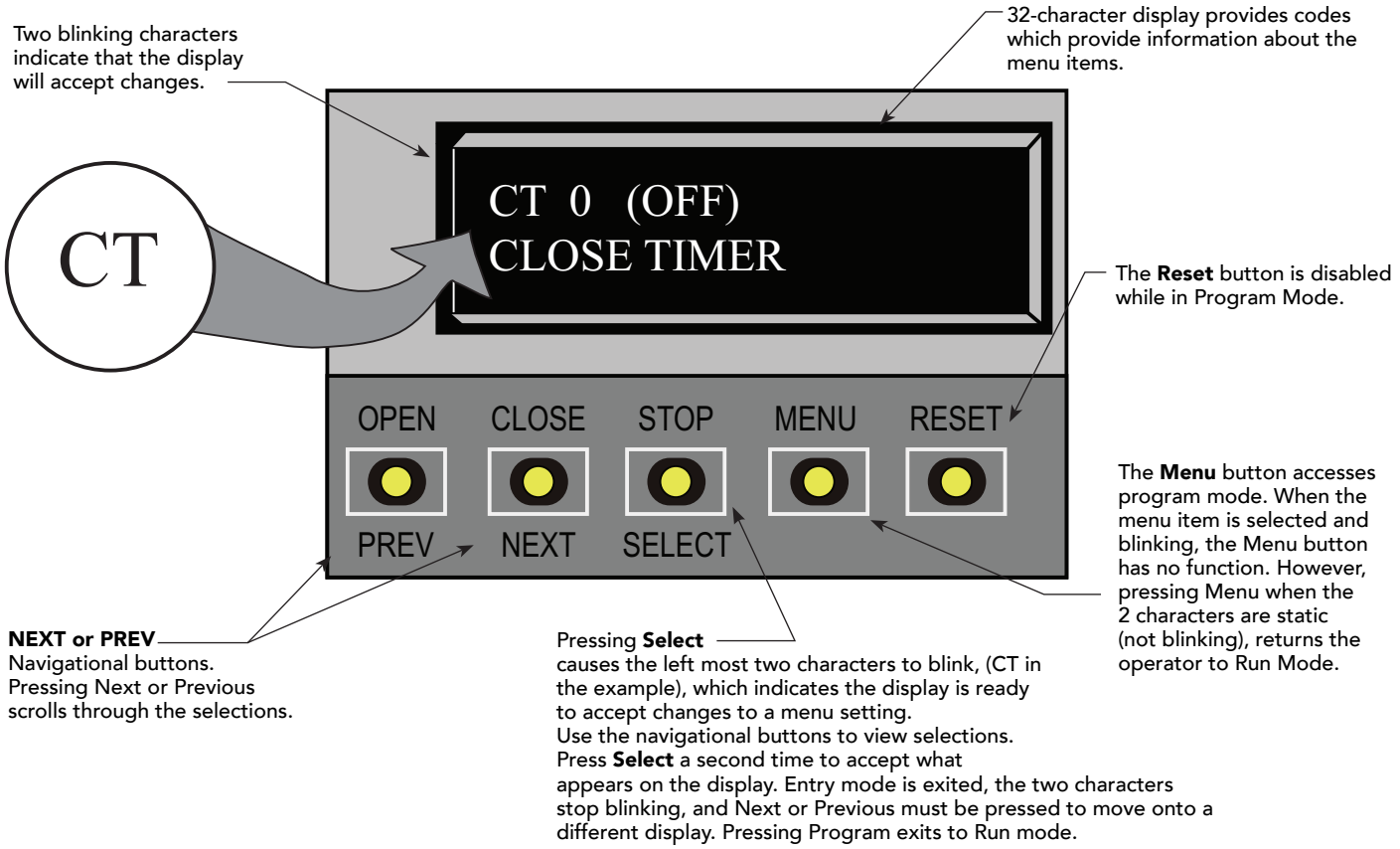

The 32-character LCD display limits what can be communicated with words. If you do not understand the abbreviated word or acronym, please review the *"User Menu"* and *"Installer Menu"* sections.

Menu Mode Navigation

Navigating within the program menus is easy once you learn how the keypad buttons function. Refer to the following chart.

Smart DC Controller: Menu Mode Navigation Buttons

To change that data appearing in the display	To navigate through the Selections	To choose what appears on the display	To navigate between menu items
Press **Select**. Two left characters blink.	Press **Next** or **Previous**. Continue pressing Next to view all selections.	Press **Select**. Blinking characters become static.	Press **Next** or **Previous**. Advance - press Next Previous - press Previous

Run Mode

The Run Mode displays appear static when the operator is ready and waiting for a run command. When the display is flashing "GATE OPENING" or "GATE CLOSING", a command has been received and the barrier gate is in motion. The command may come from a variety of sources: a card reader, push-button remote, or recognition of a vehicle passing over a loop detector. In all cases, the operator "runs" the motor when it receives an operational command.

Three displays indicate the position or status of the barrier gate. The keypad entry used to access the User or Installer menus, begins at one of these Run Mode displays.

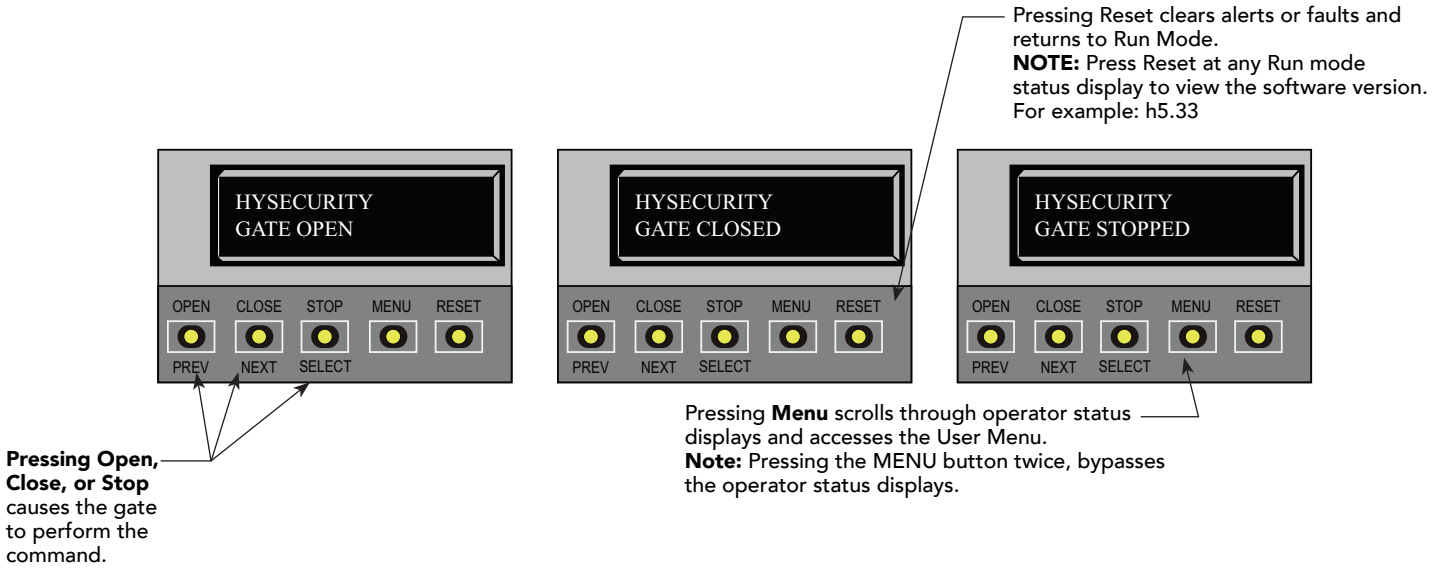

Run Mode Displays

NOTE: To access the User or Installer menus, the motor cannot be engaged and the barrier gate cannot be moving.

Viewing Operator Status Displays

Press the MENU button once and the operator status displays scroll past in two second intervals. Pertinent information appears to provide a quick overview of the operator's status or configurations.

The type of information that may scroll across the display includes: software version, operator type (OT), gate handing (LEFT HAND or RIGHT HAND), buss voltage, and life cycle counter.

Example of Operator Status Displays

User Menu

The User Menu consists of several items which can be modified using the Smart DC Controller keypad.

Access:

Pressing the MENU button, at one of the static Run Mode displays, causes the operator status displays to scroll past, stop and display the first user menu item.

When the Close Timer (or Hold to Close "HC") display appears, it means you have accessed the User Menu. The Close Timer display is the first in a cyclical series of User Menu displays.

NOTE: To access the User Menu, the operator must be in Run Mode. To bypass the operator status displays, press the Menu button a second time.

Use the navigational buttons, Select, Next, and Previous to change or view the menu functions. Table 1 describes the User Menu items and supplies the factory defaults. (Factory default settings shown in bold.)

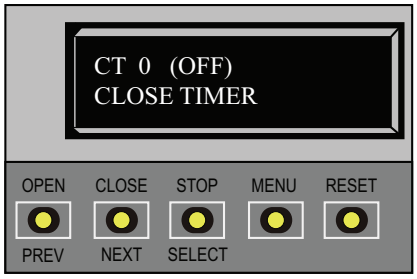

Table 3: User Menu

Table 3: User Menu			
User Menu	**Setting Options**	**Menu Tasks & Explanations**	**SDC Wire Connections**
CT 0 (OFF) Close Timer	**0 = Timer disabled (OFF)** 1 second to 99 seconds	The Close Timer assigns how many seconds before the open gate initiates closure. Keep the setting at 0 if a hard-wired, push-button control device is being used. Refer HC. **NOTE:** When the Hold to Close is set to 1, the Close Timer display does not appear and HC1 becomes the User Menu entry display.	Not applicable (N/A)
HC 0 (OFF) Hold to Close	**0 = off** 1 = on	Set to 0 to produce an gate closure when a momentary signal is transmitted. Set to 1 if a constant hold to close signal, such as a push button control, is being used. A setting of 1 also deactivates the automatic close timer and causes its menu to disappear. The Hold to Close replaces the Close Timer display as the User Menu entry display.	COM Close
HO 0 (OFF) Hold to Open	**0 = off** 1 = on	Similar to Hold to Close, but configures the Open inputs for a constant-hold function. Set to 1, a constant hold to open signal, such as a push button control, must be in use.	COM Open
AP 0 AC LOSS UPS FAIL OPEN	**0 = UPS FAIL OPEN** 1 = UPS FAIL CLOSE 2 = AUTO OPEN 3 = NO CLOSE TIMER	The setting configures how the gate functions when AC power fails.	COM
RO 0 (OFF) Radio Open/Close	**0 = off** 1 = on	A setting of zero, configures radio input for open only. Setting 1 adds the capability for radio input to close the gate, but only when it is fully open.	COM RADIO Open

Table 3: User Menu			
User Menu	**Setting Options**	**Menu Tasks & Explanations**	**SDC Wire Connections**
BF 0 (OFF) Warn Before Operate	**0 = off** **1 = warning buzzer on throughout Gate travel** 2 = warning buzzer on for 2 seconds of Gate travel	Controls the warn-before-operate buzzer and can be configured three ways: Set to 0: Buzzer is disabled. The buzzer will still beep if alerts, faults, errors, or entrapment occur. Set to 1: Buzzer beeps for 3 seconds before gate moves and continues through entire length of travel. Set to 2: Buzzer beeps for 3s before gate moves and continues for 2s of travel.	Not applicable (N/A)
FA 0 (OFF) Forced Open Alert	**0 = off** 1 = on	Intended for highly secure facilities. Set to 1, the operator sounds the 3-second "warn before operate" buzzer alarm and initiates a closure if the gate is forced open and the closed limit switch disengages. The motor starts to secure the gate. If the gate does not fully close within 4s, the motor turns off and the buzzer sounds for 30 seconds. The display shows ALERT 1 - FORCED OPEN.	N/A
DA 0 (OFF) Drift Close Alert	**0 = off (standard)** 1 = on (detailed)	Set to 1, the operator sounds the 3-second "warn before operate" buzzer alarm and initiates an open command if the gate is forced, or drifts, off the open limit switch. The motor starts to reopen the gate. The motor runs for a maximum of 4s and, if the gate is not fully open at the end of this period, the buzzer sounds for 10s. The display shows ALERT 2 - DRIFT CLOSED.	N/A
PE 0 (OFF) Photo Eye Alignment	**0 = off** 1 = on	Set to 1, the operator serves as an aide in photo eye transmitter/receiver alignment. The buzzer chirps once when the emitter and receiver are not aligned. When the emitter and receiver are aligned, the buzzer chirps twice. If they go out of alignment again, the buzzer will chirp once. The Alignment Mode is reset with a close-limit input or by pressing the Reset button. **NOTE:** If the operator doesn't run when the power switch is initially turned ON, check the alignment of the photo eye and all the photo eye connections.	EYE Open EYE Close EYE COM
CL 0 Set Clock	**0 = Display** 1 = Set Clock	To adjust the hour, minute, day, or month to a different time zone, select 1. Once the clock is set, the display returns to the 0 setting. This feature is useful to read historic operational data, which can be accessed with a computer via the USB or RS-232 port.	N/A
LD 5 LCD Contrast	**5** 0 through 9	Adjusts the contrast of the display. Available settings from low contrast 0 to 9 high contrast, with a factory default setting of 5. **NOTE:** While the Operator Status Displays are scrolling, you also have the ability to adjust the contrast by pressing the PREV and NEXT buttons.	N/A
LG 0 (OFF) VIEW EVENT LOG	**0 = OFF** 1 = On	View the Event Log using the gate operator keypad and display. For more information, refer to *Access the Event Log through the User Menu on page 67*.	N/A

Table 3: User Menu			
User Menu	**Setting Options**	**Menu Tasks & Explanations**	**SDC Wire Connections**
US 0 CLEAR COUNT	**0 = preprogrammed limit** 1 = Clear Transient count 2 = Clear Tenant count 3 = Clear Special count 4 = All User	Clears the logs (counts) of "user types" entering or exiting through the StrongArmPark DC gate. This menu is used most often in Parking lot and revenue control scenarios. Selecting a number and pressing SELECT again, clears the count.	COM TRANSIENT USER TENANT USER SPECIAL USER
DS 0 (OFF) Diagnostic Logs	**0 = off** 1 = detailed	Set to 0, the SDC logs pertinent operator events such as faults, errors, or menu manipulation. When experiencing intermittent problems, set this item to 1 to record all operator open and close events, in addition to the normal alert, fault and error logs. This parameter automatically resets to the default 0 (off) after 24 hours.	USB or RS-232 cable and laptop computer loaded with HySecurity free S.T.A.R.T. software is required to read the log file. Visit www.hysecurity.com
PD 0 Set Password	**0 = Off** 1 = On, Set Password	To enter a password (up to 80 characters) for network connectivity, select 1. You can use the menu navigation buttons to enter the password (SELECT, NEXT, SELECT). When the password is set, the display returns to the 0 setting. **NOTE:** A System Address (SA) value in the Installer Menu must be set before the Set Password display can appear in the User Menu.	Network: Ethernet or RS-485

Installer Menu

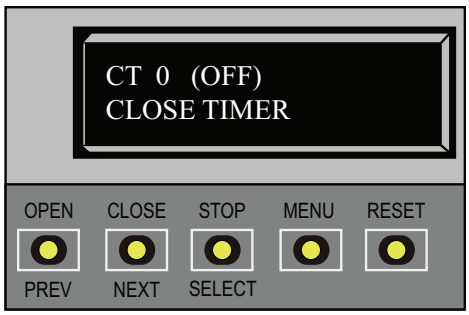

The Installer Menu options provide more advanced configurations for the gate operators. Access to the Installer Menu is through the User Menu. The navigational buttons are the same in both menu modes.

Access:

While a static Run Mode code is being displayed, press the MENU button twice. (Bypasses the operator status displays.)

When the Close Timer display appears:

1. **Access the Installer Menu** by simultaneously pressing and holding the RESET and OPEN buttons.
2. Release both buttons and the Learn Limit display appears. The LL display is the first item in the Installer Menu.

   NOTE: Installer Menu options can also be configured through the use of a laptop computer and the S.T.A.R.T. software.

Table 4 describes the Installer Menu items and supplies the factory defaults. (Factory settings shown in bold.)

Table 4: Installer Menu

Table 4: Installer Menu			
Installer Menu	**Setting Options**	**Menu Tasks & Explanations**	**SDC Wire Connections**
OT 0 Set Operator Type	**0 = operator type** 12 = SwingSmart DC 20 & DCS 20 Solar 14 = StrongArmPark DC 10 & DC14 DCS 10 Solar & DCS 14 Solar 15 = SlideSmart DC 15 & DCS 15 Solar 16 = SlideSmart DC 10F & DCS 10F Solar	Select the appropriate number for the operator. **NOTE:** This menu item only appears if the Smart DC Controller is being replaced. **CAUTION: If you are replacing an SDC board, remember to transfer the operator's menu settings from the existing board to the replacement board. Refer to the installation instructions that accompany the replacement SDC board.**	Not applicable (N/A)
MN 0 Model Number	**0 = model type unknown** 1 = Model 10 2 = Model 14	Select the type of StrongArmPark DC model used at the site. **NOTE:** This menu item only appears when you set the OT (operator type).	N/A
LL 0 (OFF) Learn Limit Reset	**0 = Normal setting** 1 = Erases learned limit positions	Set to option 1, the system resets to accommodate for relearning limits.	N/A
UC 0 Usage Class	**0 = gate disabled** 1 = Family dwelling (1 to 4 units) 2 = Multi-family & commercial 3 = Light industrial* 4 = Industrial/guarded secure* *Not serving the general public	Set the UL usage class. The installer must set the usage class for the operator to function. See *Identifying Gate Operator Category and Usage Class on page 7*. **NOTE:** The usage class setting does not appear on StrongArmPark DC and Crash products.	N/A
SH 0 Gate Handing	**0 = gate disabled** R = viewed from the secure side, the arm lifts right to open L = viewed from the secure side, the arm lifts left to open	The handing determines which way the gate opens as you view it from the front access panel. **NOTE:** StrongArmPark DC is factory configured for left handing.	N/A
OS 1 Open Speed	**DC10** / **DC14** **1 = 2.5 seconds** / **1 = 3.5 seconds** 2 = 2.0 seconds / 2 = 3.0 seconds 3 = 1.5 seconds / 3 = 2.5 seconds	Adjust how quickly the barrier arm opens.	
CS 1 Close Speed	**1 = 2.5 seconds** / **1 = 3.5 seconds** 2 = 2.0 seconds / 2 = 3.0 seconds 3 = 1.5 seconds / 3 = 2.5 seconds	Adjust how quickly the barrier arm closes.	
FD 0 (OFF) Load Factory Defaults	**0 = user settings** 1 = reload factory settings	Select setting 1 to return the operator to factory defaults which globally restores all menu settings back to new operator status. **NOTICE:** If factory defaults are restored, any customized menu settings will need to be reprogrammed. Before loading factory defaults, you can save your customized menu settings using a PC laptop & S.T.A.R.T.	N/A
DG 0 (OFF) Dual Gate	**0 = solo operator** 1 = Slave unit 2 = Master unit 3 = Sally Port A 4 = Sally Port B	Establishes communication after wiring dual gate connections between two operators in Master/Second (Slave) or Sally Port site configurations. This menu item appears if the sequenced gate menu item SG is set at 0 (off).	Dual Gate COM (Gate 1) to Dual Gate COM (Gate 2) A to A B to B

Table 4: Installer Menu			
Installer Menu	**Setting Options**	**Menu Tasks & Explanations**	**SDC Wire Connections**
SG 0 (OFF) Sequenced Gate	**0 = off** 1 = Loop Layout/Site #1 2 = Loop Layout/Site #2	Establishes communication after wiring two or more operators as sequenced gates. This menu item only appears if the Dual Gate menu item DG is set at 0 (solo operator). **NOTE:** Access the User Menu in both operators and set a Close Timer.	Connect Dual Gate COM (Traffic Gate) to Dual Gate COM (Security Gate) A to A B to B
CH 0 (AC) Charger Type	**0 = AC powered charger** 1 = Solar powered charger	Assigns charger type. If a solar-powered unit is ordered and delivered factory-ready, this menu will not appear. **NOTE:** Menu item does not appear on an AC-powered operator.	
BT 0 (STANDARD) Battery Type	**0 = standard 8Ah** 1 = extended (50 Ah) 2 = maximum (110 Ah)	Assign the battery type used by the operator. Smaller batteries are charged with less current to avoid overheating and larger batteries are charged with more current to supply a more rapid charge.	Extended and maximum batteries require separate housing and wiring.
FO 0 (OFF) Fire Dept Open	**0 = disabled** 1 = enabled	Provides the Fire Dept. Open input and allows a button to activate the emergency open when connected to +24VDC. When set to 1, the open signal received by the operator overrides all photoelectric eyes and edge sensors, and opens the barrier arm. Pressing the Reset or Open button is required before the barrier arm can be closed.	+24V Fire Dept Open
SE 0 IES Sensitivity	**0 = Maximum (highest) sensitivity** 1 = Moderate sensitivity 2 = Least sensitivity	Adjusts the sensitivity of the dynamic reversing sensor. Available settings are 0 to 2. Zero is the default and reacts quickly (high sensitivity) to impediments. **NOTE:** For StrongArmPark DC, adjust the spring to prevent false trips prior to changing the sensitivity.	See NOTE.
LC 0 (0.0 SECS) Leaf Delay Close	**0 = none** 1 through 20 For example: 1 = ½ second 4 = 2 seconds 20 = 10 seconds	Delays gate closure. This menu option appears if the gate operator is designated as a dual gate system (Master/Second, for example). Available settings are 1 to 20. Each increment adds ½ second, to a maximum of 10 seconds time delay, before the operator activates when commanded to close.	DUAL GATE inputs on both operators
LO 0 (0.0 SECS) Leaf Delay Open	**0 = none** 1 through 20 For example: 1 = ½ second 4 = 2 seconds 20 = 10 seconds	Delays gate opening. This menu option appears if the gate operator is designated as a dual gate system (Master/Second, for example). Available settings are 1 to 20. Each increment adds ½ second (with a maximum of 10 seconds) time delay following a command to open before the operator activates.	DUAL GATE inputs on both operators
EC 0 STOP ONLY Eye Close Logic	**0 = Close eye stops only** 1 = Reverse to full open with barrier gates (2 second reverse to open on swing, slide, or vertical gates)	The default setting is non-reversal if the close photo eye is triggered. A setting of 1 causes the barrier arm to reverse and travel full open if triggered while closing.	EYE Close EYE COM (Inputs #14 or #15)

Table 4: Installer Menu			
Installer Menu	**Setting Options**	**Menu Tasks & Explanations**	**SDC Wire Connections**
SR 0 (FULL OPEN) IES Sensor Logic	0 = Reverses full open **1 = ½ second reversal (.5)**	The default setting is a ½-second duration reversal if the dynamic reversing sensor is triggered. The optional setting of 0 will cause the gate to reopen fully if triggered while closing.	N/A
PC 0 NO CONTACT Photo Eye Output	**0 = Normal Open PE output** 1 = Normal Closed (monitored)	The default setting is photo eyes with Normally Open outputs. Setting 1 requires a Normally Closed (NC) output which requires both a photo EYE OPEN and a photo EYE CLOSE are connected. If set for NC, the connection is supervised and any open or short circuit fault will generate a FAULT 2 which requires a STOP button reset to re-enable any functions triggered.	EYE OPEN EYE CLOSE 4 wires total: COM/+24 COM/ PHOTO EYE CLOSE
GC 0 NO CONTACT Gate Edge Output	**0 = Normally Open Edge** 1 = Normally Closed	The default setting is edge sensor with Normally Open (NO) output. The optional setting of 1 requires an (NC) output.	COM EDGE
DT 0 FREE EXIT Disable Function	**0 = Disable Free Exit** 1 = Disable Close Timer	Configures the BLOCK EXIT input to disable either the Free Exit Detector function or, alternately, the Timer To Close function. The default setting disables the free exit detector. **NOTE:** The free exit is disabled when the gate is at its closed limit. If the closed limit is not tripped, the free exit continues to work normally.	COM BLOCK EXIT
OR 1 REVERSE Outer Arm Loop	0 = Pause closing only **1 = Enable reversing to open** 2 = Ignore and continue closing	The default is for full reversal when the loop is triggered. A setting of 0 causes the barrier arm to only pause when triggered. Closure begins as soon as the loop is clear again. A setting of 2 is provided for the most secure facilities where it is essential that the loop trigger is completely ignored and the barrier arm continues closing without pause or reversal.	OUT OBS LOOP (OUTER ARMING) COM or connection to Hy5x detector
IR 1 REVERSE Inner Arm Loop	0 = Pause closing only **1 = Enable reversing to open** 2 = Ignore and continue closing	The default is for full reversal when the loop is triggered. A setting of 0 causes the barrier arm to only pause when triggered. Closure begins as soon as the loop is clear again. A setting of 2 is provided for the most secure facilities where it is essential that the loop trigger is completely ignored and the barrier arm continues closing without pause or reversal.	IN OBS LOOP (INNER ARMING) COM or connection to Hy5x detector
DL 1 STANDARD Detector Logic	**1 = Standard** 2 = Quick Close	Configures for faster closure. This selection determines whether the close timer begins to count after vehicles have departed the detector loops or whether the close timer will count down while the loops are occupied. The default setting 1 causes the Close Timer to start when the Center Loop is clear. A setting of 2 causes the Close Timer to start when the open limit switch trips.	Center Loop COM or connection to Hy5x detector

Table 4: Installer Menu			
Installer Menu	**Setting Options**	**Menu Tasks & Explanations**	**SDC Wire Connections**
CR 0 REVERSE Center Loop	**0 = Reopen if center loop triggers** 1 = Pause only	The default allows the barrier arm to reopen if the Center Loop detector is triggered during closure of the barrier arm. A setting of 1 causes the barrier arm to only pause when triggered. Closure begins as soon as the loop is clear again.	Center Loop COM or connection to Hy5x detector
CB 0 (OFF) CLD Disable ELD	**0 = Normal operation of Free Exit** 1 = Disable Free Exit	Setting 1 allows an CLD input to disable the Free Exit Detector (ELD) until the barrier arm is fully closed. Used in bi-directional traffic situations.	Center Loop COM or connection to Hy5x detector
CP 0 (OFF) CLD Counts PBO	**0 = Immediate closure** 1 = Provides addt'l open time	The default allows the Center Loop Detector when triggered and released, to close the barrier arm immediately. The optional setting of 1 designates that the Smart DC Controller remember an additional open command if the open input is activated a second time while the barrier arm remains open. (For example, to prevent a vehicle from being stranded).	Center Loop COM or connection to Hy5x detector
EB 0 (OFF) ELD Backoff	**0 = Normal operation of Free Exit** 1 = Back off close function	The default allows normal latch open operation of the Free Exit detector. The optional setting of 1, creates an automatic close function if a vehicle triggers and then backs off the Free Exit Loop detector.	Free Exit Loop COM or connection to Hy5x detector
RL 1 0 DISABLED Relay 1 Logic	**0 = Disabled** 1 to 38 available	Configures the function of the User 1 output relay. It has the capacity to switch both AC and DC loads and can be used for high voltage and/or high current loads. Connect devices directly to the top of the relay: COM and either NO and/or NC contacts. Multiple logic function options exist. See *User Relays - Programming Procedure on page 47*.	COM User 1 Relay
RL 2 0 CLOSE LIMI Relay 2 Logic	**0 = Disabled**	Relay 2 configures the function of the User 2 output relay, which is an electronic relay with the capacity for switching a DC load only. **NOTE:** In the StrongArmPark DC, it is recommended to use the User 2 Relay for connection to the LED arm lighting.	COM User 2 Relay
RL 3 0 DISABLED thru RL 10 0 DISABLED Relay Logic	**0 = Disabled** 1 to 38 available	Similar to Relay 1 Logic.	COM User 3 through 10 Relay
TL 2 (45 SECS) Open Time Alert	**2 = 45 second delay** 0 = 0s delay 1 = 15s 3 = 75s 4 = 105s 5 = 135s	This menu item only appears if the #8 User Relay function has been selected. It adjusts the time delay before activation of the User Relay function.	User Relay

Table 4: Installer Menu			
Installer Menu	**Setting Options**	**Menu Tasks & Explanations**	**SDC Wire Connections**
LT 3 (75 SECS) Loitering Alert	**3 = 75 second delay** 0 = 0s delay 1 = 15s 2 = 45s 4 = 105s 5 = 135s	This menu item only appears if the #13 User Relay function has been selected. It adjusts the time delay before activation of the User Relay.	User Relay
SA 0 (OFF) SDC Address	**0 = No network** 1 to 99 = Network "drop" address	Sets the system address for network communication: 0 = no network communication 1-99 sets individual poling addresses. See PD SET PASSWORD in *Table 3: User Menu on page 30.*	RS-485. Involves additional hardware & software.
ELD0 RUN MODE Exit Loop Set	**0 = Run mode** 1 = Show frequency 2 = Show call level 0-7 3 = Set Frequency	Controls the Hy5x Free Exit loop detector.	Hy5x
ILD0 RUN MODE In Arm Loop Set	**0 = Run mode** 1 = Show frequency 2 = Show call level 0-7 3 = Set Frequency	Controls the Hy5x Inside Obstruction Loop (Inner Arming Loop) detector.	Hy5x
OLD0 RUN MODE Out Arm Loop Set	**0 = Run mode** 1 = Show frequency 2 = Show call level 0-7 3 = Set Frequency	Controls the Hy5x Outside Obstruction Loop (Outer Arming Loop) detector.	Hy5x
CLD0 RUN MODE Center Loop Set	**0 = Run mode** 1 = Show frequency 2 = Show call level 0-7 3 = Set Frequency	Controls the Hy5x Center Loop detector.	Hy5x

Setting the Time and Date

A feature of the Smart DC Controller is its 24-hour, 365 day clock. Make sure it is set to the appropriate time zone. An accurate time and date allows the diagnostic log to date stamp operational data which indicates when Alerts, Faults and Errors occur. The log helps in troubleshooting and can be viewed using the S.T.A.R.T. software application via a laptop connected to the USB or RS-232 port. For more information, refer to *Smart Touch Analyze and Retrieve Tool (S.T.A.R.T.) on page 77*.

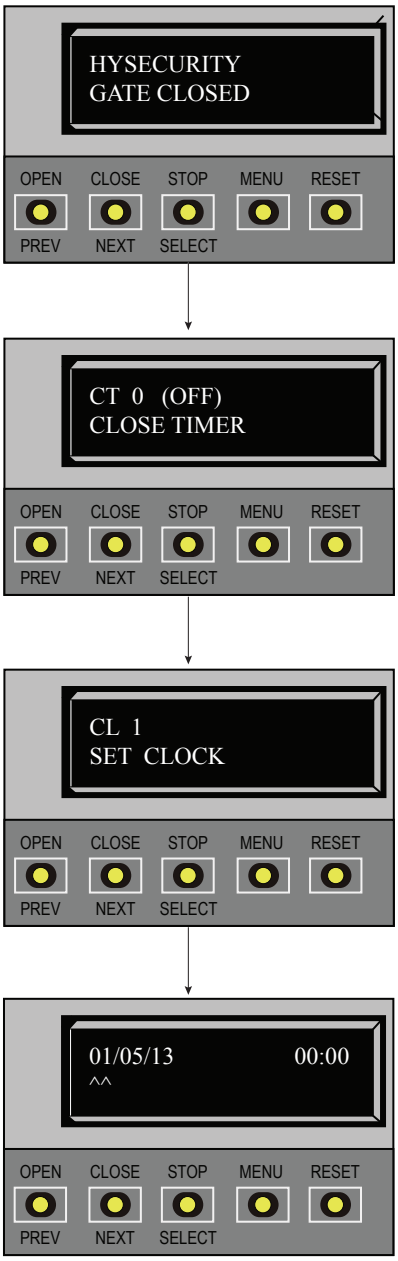

To set or adjust the time or date, take the following steps:

1. At a gate status display, press the MENU button twice. This accesses the User Menu and the CLOSE TIMER display appears.
2. Press NEXT or PREV until the SET CLOCK display appears.
3. Press SELECT.
4. CL blinks.
5. Press NEXT or PREV to change the number to 1.
6. Press SELECT to accept the display.
7. The date and time display appears. Use the SELECT and NEXT buttons in the same manner as before to adjust the date and time.

   NOTE: A date or time field must be blinking before it can be changed.

8. To accept what appears on the date and time display, press SELECT.
9. To exit the User Menu, press the MENU button. A gate status appears in the display indicating you have returned to Run Mode.

NOTE: A lithium coin battery supports the clock so the date and time is retained even when the main power is turned off. Replace the battery about every five years with a DL 2025, DL 2032 or CR 2025 or CR 2032 battery. Refer to Clock Battery Replacement.

Resetting Open and Close Limits

Resetting the open and close limits is easily accomplished by accessing the Installer Menu.

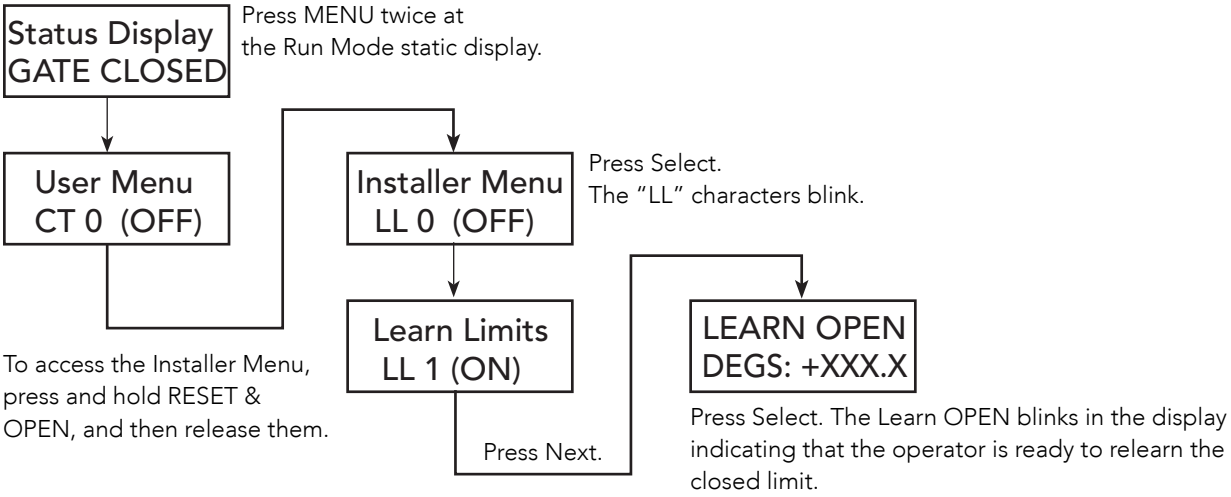

Learn Open Limits

1. Press and hold the OPEN button while the degrees increase toward 90 and the barrier arm reaches the desired full open position.
2. Release the OPEN button as the arm nears full open. The motor slows as do the numbered increments on the display. Note that if you go too far, you can press CLOSE to reverse direction.
3. Press STOP twice to preserve the open stop location. The buzzer chirps twice and the full open stop is retained in memory.

Learn Close Limits

1. Press and hold the CLOSE button while the degrees increase toward - 90 and the barrier arm reaches the desired full open position.
2. Release the CLOSE button as the arm nears full open. The motor slows as do the numbered increments on the display. Note that if you go too far, you can press OPEN to reverse direction.
3. Press STOP twice to preserve the open stop location. The buzzer chirps twice and the full open stop is retained in memory.

Test the Operator

Complete the installation by testing the operation of the gate.

NOTE: The operator must be turned on and in Run mode. A Run mode display appears on the SDC. If a Run mode status does not appear on the display, press Reset. If an error, alert, or fault appears on the display, refer to the *"Troubleshooting"* section to learn how to clear the display and return to Run mode.

1. Press Open to open the barrier arm.
2. Test the operator.
   - Cycle the barrier arm a few times by pressing the Close and Open buttons.

NOTE: If additional accessories are to be added, read about *SDC Inputs & Wiring on page 41*.

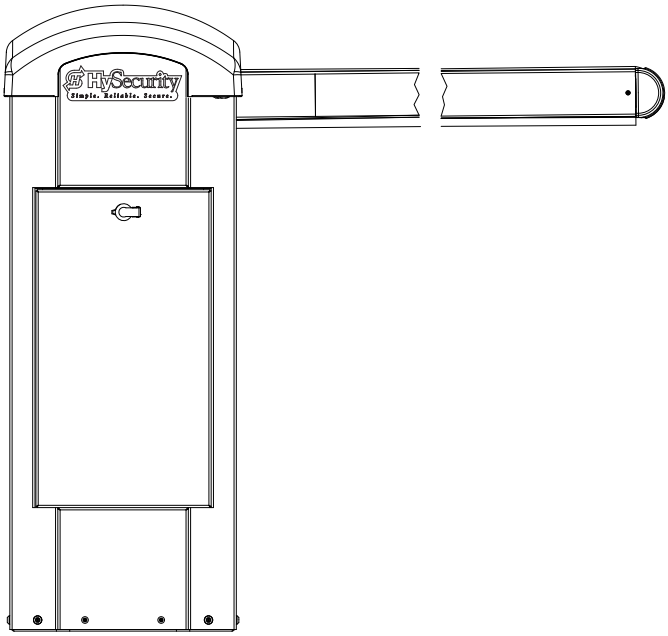

Setting the Close Timer

As an added security measure and to make sure the barrier arm closes automatically within a reasonable time frame after all loops are cleared, you must set the Close Timer.

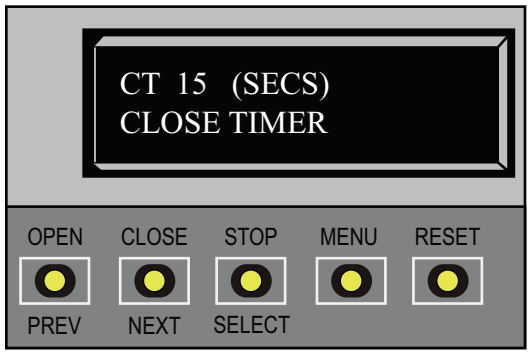

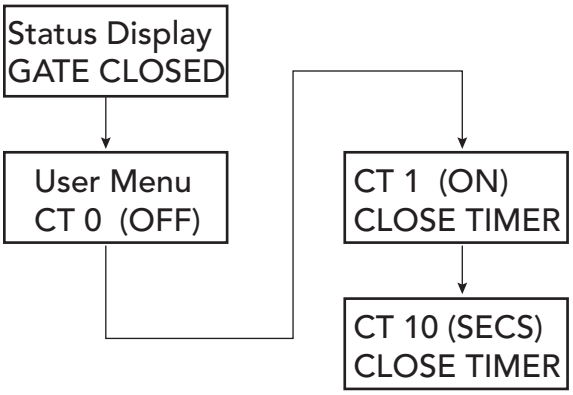

The Close Timer assigns how many seconds will pass before the operator initiates closure of a fully opened barrier arm after all open commands and reversing sensor inputs have ceased and loops cleared. Every gate operator needs to have the close timer set to a specific number of seconds (for example, 5 seconds) unless a hard-wired closing device is connected to the unit, such as a "hold to close" push button station.

To adjust the time (1 to 99 seconds) it takes before the operator initiates gate closure, take the following steps:

1. At a gate status display, press the MENU button twice. This accesses the User Menu and the Close Timer display appears.

   NOTE: If you want gate personnel to operate the gate with the Hold to Close feature found in some push button stations, then set the Hold to Close menu item to 1. When the Hold to Close menu item is active (set to 1), the Close Timer menu item is unavailable.

2. Use the Select, and then Next or Previous buttons to change the number of seconds appearing on the display.
3. To exit the User Menu, press the MENU button. The gate status appears in the display indicating you have returned to Run Mode.

SDC Inputs & Wiring

This section provides information about the Smart DC Controller, its inputs for peripheral connections, and its monitoring capabilities. This section explains how to:

- Make Connections on the Smart DC Controller
- Integrate with Security Systems
- Connect Accessory Devices

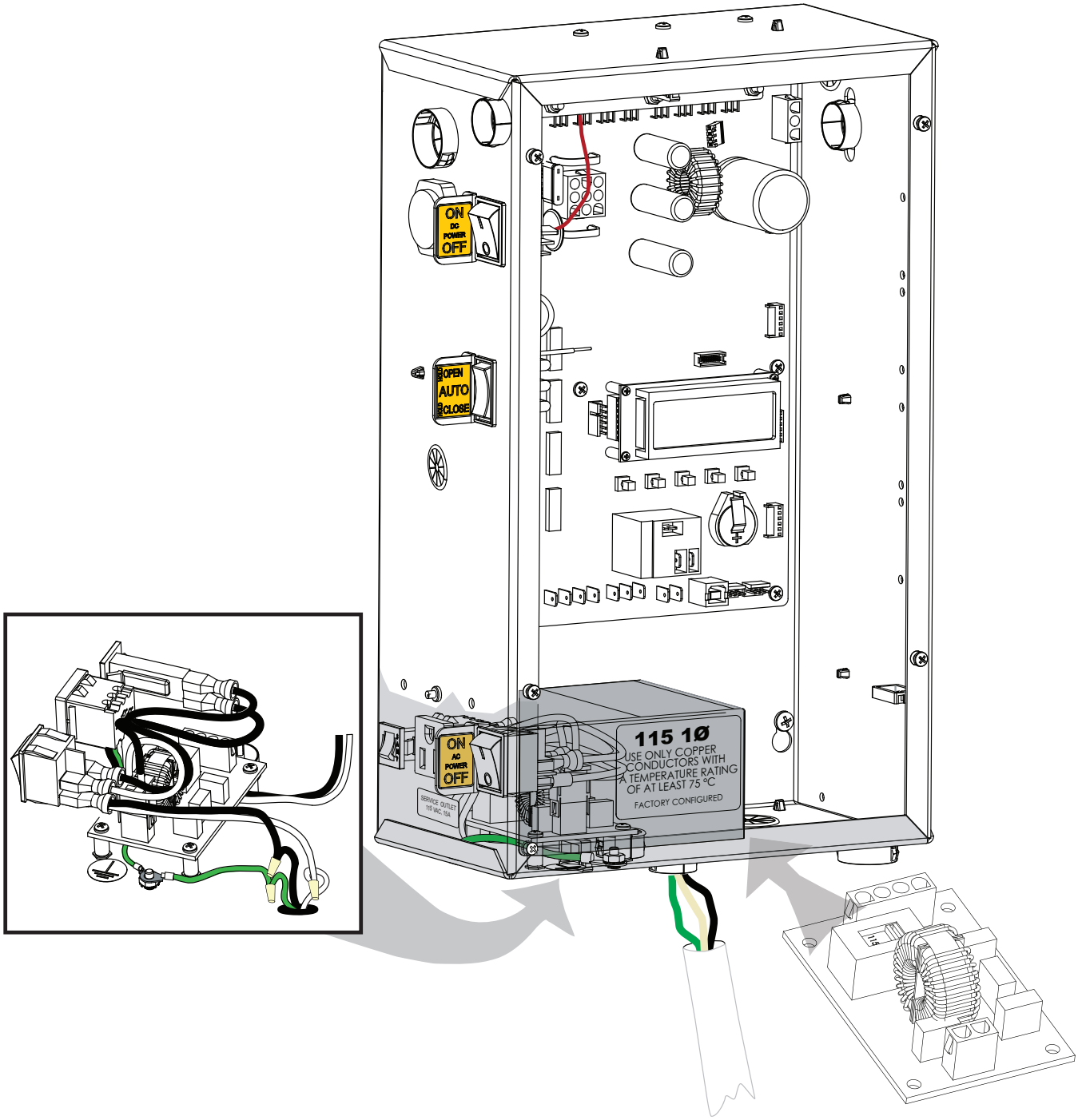

Overview of the Smart DC Controller

The Smart DC Controller uses LED's to indicate active inputs when AC power is present. For operators that use only DC power, you can push a button to show the active inputs. This SHOW LEDS button is at the bottom left corner near the EMERG OPEN input.

On a new operator no active inputs should appear until external accessories and wiring are attached. If any inputs are active before connecting external wiring, refer to Troubleshooting.

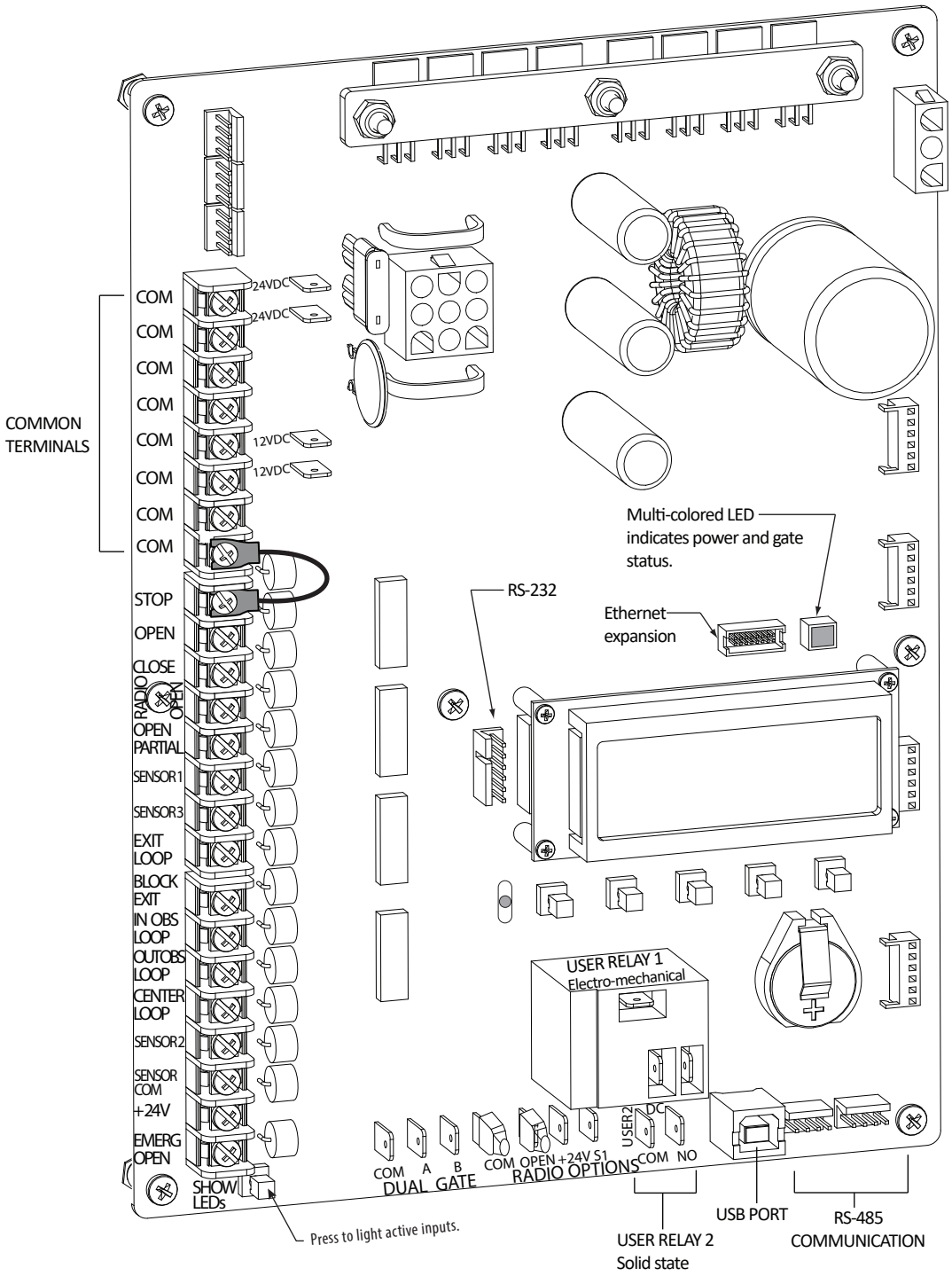

Smart DC Controller Board

Integrating with Security Systems

HySecurity gate operators provide a 2-wire, serial interface (RS-485 connection) which allows remote access to one or more operators. With software protocols provided by HySecurity, bi-directional status updates and control commands are easily integrated with a central controller (computer or server), which becomes the primary (master) to the connected operators. Several physical operators (1 to 99) can be polled from the central master command station. Reset requests, gate control, gate status, and gate faults can be monitored and information can be retrieved from the central command station.

The RS-485 interface is also used to communicate with the HyNet Gateway, a web-enabled interface. For specific information regarding HyNet Gateway SFP 4/1, go to www.hysecurity.com.

SA Display in the Installer Menu

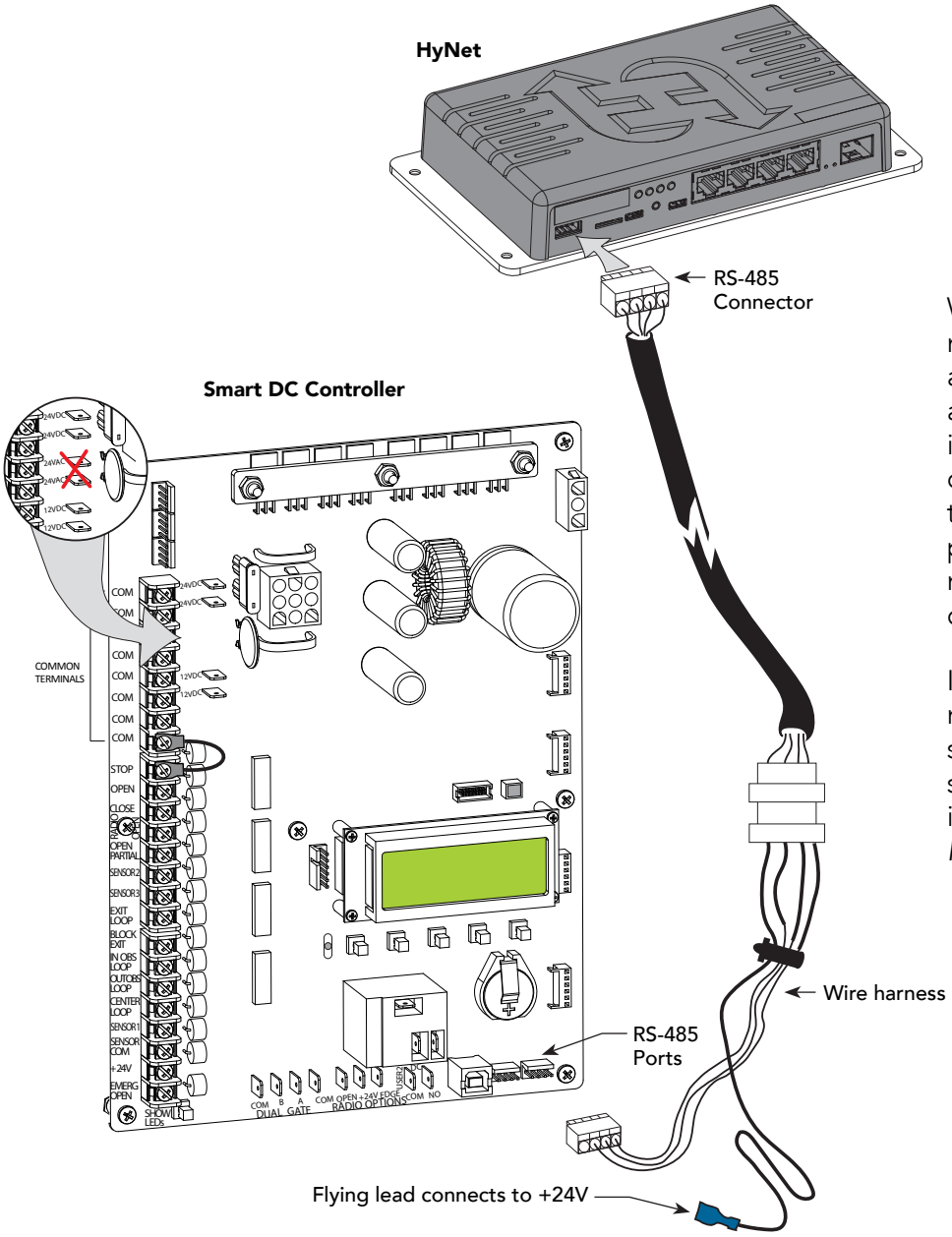

When the physical connection is made and protocols are established, an SA (System Address) must be assigned for each operator through its Installer Menu. For network communication, choosing a SA of 1 to 99 establishes individual network polling addresses. An SA of zero means no network communication is desired.

If you plan to connect operators to a networked central master command station, contact HySecurity for software protocols and additional information. Refer to *Contact Information on page 10*.

Smart DC Controller Inputs

When using AC power, an LED lights next to active inputs. On a new operator, no active input should appear until external accessories and wiring are attached. If any inputs are active before connecting external wiring, refer to *Troubleshooting on page 66*.

1. Test the open and close function of the barrier arm before wiring to accessory devices (external control inputs).

   NOTE: If you are using the operator strictly in a DC capacity, the Smart DC Controller has a tact button you can push which lights an LED next to the active inputs. This button is in the bottom left corner of the SDC board. Press the SHOW LEDs push button to verify the status of the terminal inputs.

2. All control device inputs listed below are shown as a single input. In most cases, the second wire is connected to one of the eight Common Terminal Bus (COM) on the Smart DC Controller board.

   NOTE: The Emergency Close and Fire Dept. Open inputs are an exception and require a +24V input, as well as activation in the Installer Menu. For convenience, a +24V is located next to the EMERG OPEN terminal.

SDC Terminal Inputs

NOTICE: A label on the Control Box indicates the change in inputs for revenue control sites. Refer to *Revenue Control Parking Applications on page 49*.

Table 5: SDC Inputs

Table 5: SDC Inputs			
Label	**SDC Terminal**	**Wire Connections**	**Commonly used for...**
COM	COM	Common terminal. all user inputs are energized when connected to common except Emergency Open.	All inputs except Emergency Open.
STOP	Stop* Button	Normally Closed input. Jumper to Common if input is not being used.	Line of sight, external stop button or 3-button station.
OPEN	Open* Button	Normally Open (N.O.) input. Do not use for radio or remote access controls.	Line of sight, external open button or 3-button station.
CLOSE	Close Button	N.O. input. Do not use for radio or remote access controls.	Line of sight, external close button or 3-button station.
RADIO OPEN	Remote Open & Radio Control	N.O. input. For radio/remote open device: Access the RO from the User Menu and set to 1 for close function too.	Remote access control or radio controls
OPEN PARTIAL	Open Partial	Normally Open (N.O.) input.	Supervised access controls
EYE OPEN	Eye Open	Spare input for StrongArmPark DC only. N.O. input for SlideSmart DC & SwingSmart DC. Connection for Photo Eye Open direction. Can be changed to a monitored Normally Closed (N.C.) contact through the Installer Menu	Non-contact entrapment sensors.
EYE CLOSE	Photo Eye Close direction	N.O. input. Connection for Photo Eye Close direction. Can be changed to a monitored Normally Closed (N.C.) contact through the Installer Menu.	Non-contact entrapment sensors.

Table 5: SDC Inputs			
Label	**SDC Terminal**	**Wire Connections**	**Commonly used for...**
EXIT LOOP	Free Exit Vehicle Detector	N.O. input. Connection for free exit vehicle detector.	Vehicle detector, box type connections for free exit loop.
BLOCK EXIT	Block Free Exit vehicle detector or Close Timer	N.O. input. Free Exit is only disabled if Close Limit Switch is tripped.	Installer menu enabled. See DT 0 If the gate is partially opened, the Free Exit detector will trigger the gate to open fully. The input can be converted in the Installer Menu to alternately disable the Close Timer.
IN OBS LOOP	Inside Obstruction/ Arming Vehicle Detector	N.O. input. Inside reversing loop.	Vehicle detector, box type connections inside reversing loop
OUT OBS LOOP	Outside Obstruction/Arming Vehicle Detector	N.O. input. Outside reversing loop.	Vehicle detector, box type connections outside reversing loop
CENTER LOOP	Center Loop (Shadow) Vehicle Detector	N.O. input. Center Loop for StrongArmPark DC. Shadow function used for Swing gates only.	Vehicle detector, box type connections. Shadow function for swing gates, reset function for barrier arm gates.
EDGE	Edge Sensor	N.O. input. One input works for both directions of travel. It can be changed to N.C. contact through the Installer Menu.	Gate edge, entrapment device sensor connections. One input works for both travel directions.
EYE COM	Photo Eye Common	When the Photo Eye Open and Photo Eye Closed common wires are connected to this terminal, the photo eyes energize only when the motor runs.	Photo eye connections. Use these terminals to preserve battery power.
+ 24	+24V DC	24VDC power.	Convenient 24VDC power for photo eyes or the Emergency Open input.
EMERG OPEN	Emergency Open (Fire Dept.Open) **	N.O. input.	The Emergency Open must be enabled via the Installer Menu. It is energized by connecting to the +24V terminal above it. The EMERG OPEN overrides photo eye & edge sensor commands.

* Do not connect an external control to the STOP or OPEN inputs unless the controls are located in clear view of the entire gate area. Use the RADIO OPEN input or RADIO OPTIONS spade connections for all out-of-sight controls, such as a telephone entry or radio operated controls.

**The Fire Department Open control must be keyed or guarded so that it can only be used by authorized personnel.

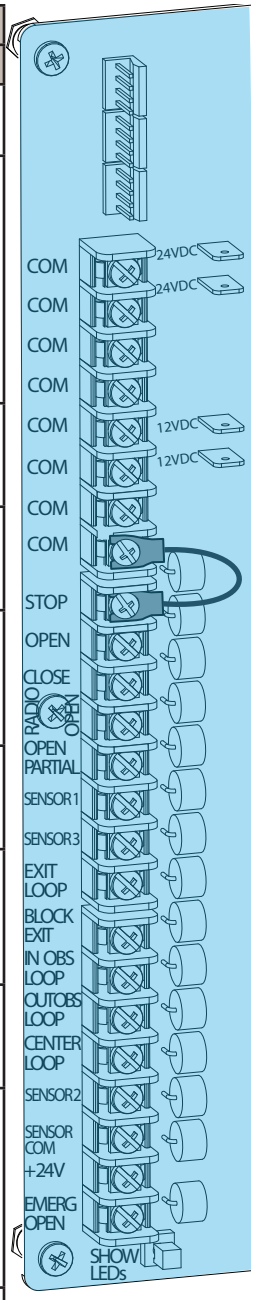

SDC Inputs

Connecting Accessory Devices

Devices, such as gate edge sensors and photoelectric beams, must be installed to protect against entrapment. These secondary entrapment protection devices are required for the gate installation to be in compliance with UL 325 Safety Standards. Most Crash gates are site-specific when it comes to safety standard compliance, and power requirements fall under UL 508A. Always check your local area codes and comply with all regulations.

Standard accessory (entrapment and loop wire) connections are shown in the following illustration. All accessories require a minimum of two connections:

- a device input
- a Common Bus Terminal (COM)

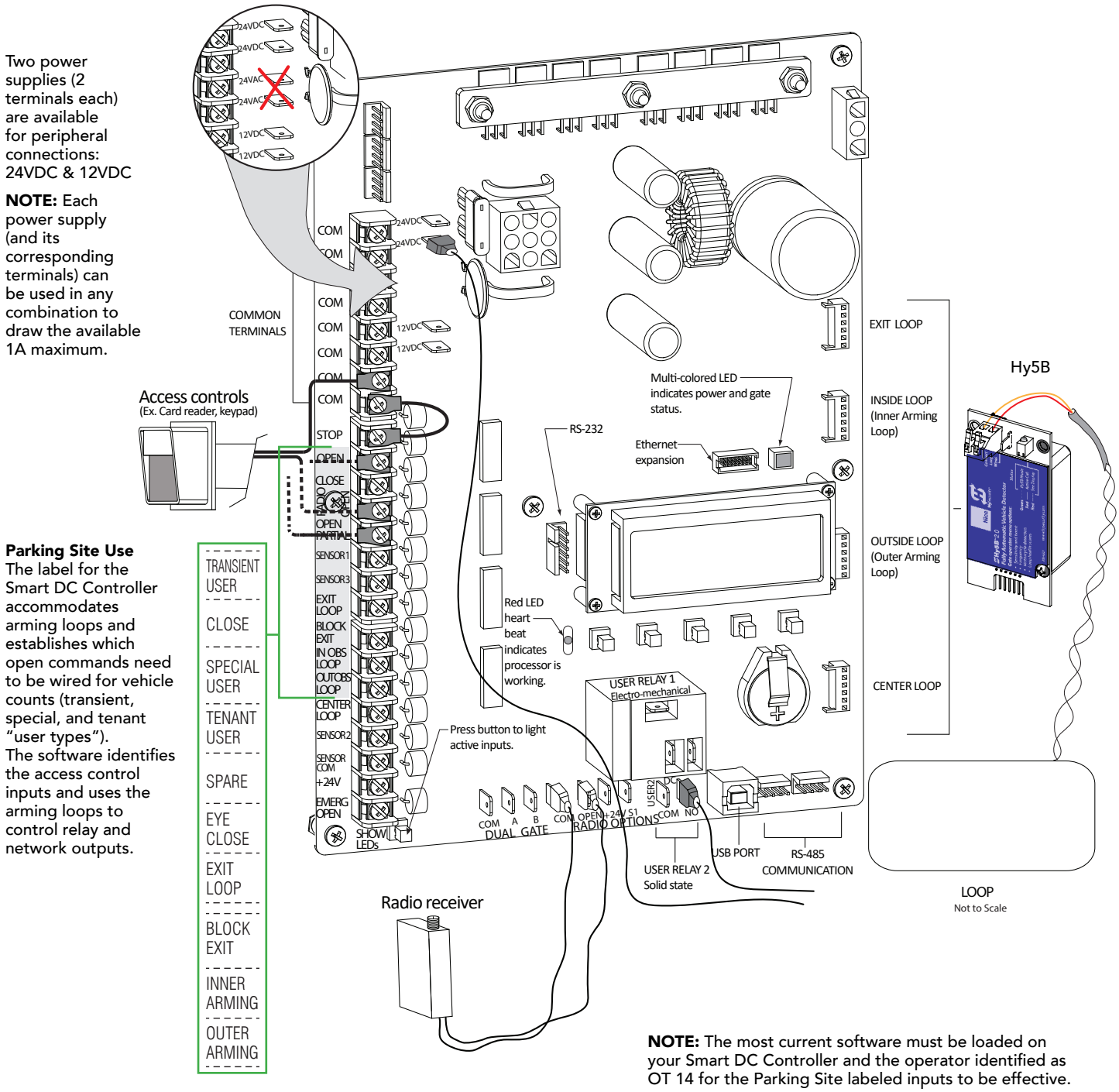

NOTE: The most current software must be loaded on your Smart DC Controller and the operator identified as OT 14 for the Parking Site labeled inputs to be effective.

User Relays - Programming Procedure

The Smart DC Controller is able to interface with many types of external devices through the use of programmable output relays: one mechanical relay (User 1) and one solid state relay (User 2) which is used most often for connection to flashing devices.

NOTE: For StrongArmPark DC, an extended relay module option provides 8 additional mechanical relay connections. In the chart below, you use Relay 3 Logic through Relay 10 Logic for wire connections.

All of the user relay functions identified and described in the table below are accessible in the Installer Menu selections.

NOTE: A setting of zero disables a user relay. The user relays will operate normally to 18VDC. Below 18VDC, alert notification occurs. On StrongArmPark DC the R2 RELAY 2 LOGIC is recommended for LED arm lights.

Use the SDC buttons to program the user relays according to the following steps:

1. Select the relay you wish to use through the *Table 4: Installer Menu on page 33*. For example: R1, RELAY 1 LOGIC.
2. Select the appropriate function (1 through 39) by changing the display to the associated number listed in the table. Use the Select, Next and Previous buttons to make your selection. See *Menu Mode Navigation on page 28*.

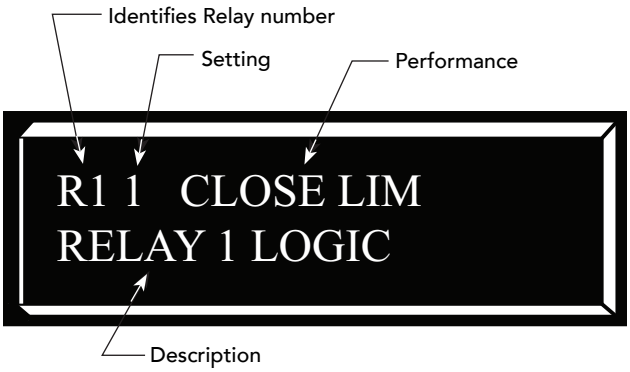

Table 6: Programmable User Relays

Table 6: Programmable User Relays			
Relay No.	**Name**	**Description**	**Wire Connection**
1	Close limit output	Output can be used as an interlock signal to another operator's interlock input, or simply to indicate that the gate is secure. The relay is "off" when the gate is closed. The relay energizes when the fully-closed limit is released. (Any open command energizes the relay.)	Relay 1
2	Close limit pulse output	Used in a sequenced system to command a second operator to close. Generates a brief pulsed output that occurs when the close limit is triggered.	Relay 1
3	Open limit output	Indicates a full-open position. This output becomes active when an open-limit is triggered and deactivates when the open-limit is released or a close command is received.	Relay 1
4	Open limit pulse output	Used in a sequenced system to command a second operator to open. Generates a brief pulsed output that occurs when the open limit is triggered. An additional pulse is also generated with any new open command even when the gate is already fully-opened.	Relay 1
5	Warn before/during operate output	Controls an external warning device. This output operates at the same time as the internal warn before operate buzzer.	Relay 1

Table 6: Programmable User Relays			
Relay No.	**Name**	**Description**	**Wire Connection**
6	Gate Lock output	Controls external solenoid or magnetic locks. In both directions of travel, this output is activated about 7/10ths of a second before the operator starts moving the gate and remains active while moving. Output remains active, for a few seconds, after stopping.	Relay 1
7	Gate forced open output	Controls an external warning device. Activated if the gate is forced off the closed limit switch and the operator is not able to restore the gate to full closed position within four seconds. **NOTE:** This alarm resets itself in 30 seconds.	Relay 1
8	Gate open too long output	Controls an external warning device. Activates when the gate is open longer than the user-selected period of time. Adjustable from 0 seconds with 15 to 135s selectable delay timeframes in 30s increments. **NOTE:** TL - Open TIME ALERT adjustments can be made in the Installer Menu. The TL Installer Menu display only appears when using this relay.	Relay 1
9	Safety Mode Alert output	Controls an external warning device. Activated when the system is in Safety Mode or Entrapment Mode. Safety Mode occurs when the gate encounters an obstruction. In Entrapment Mode ,the gate is stopped, and alert occurs if the internal inherent sensor triggers while the system is in Safety Mode.	Relay 1
10	Entrapment Mode Alert output	Controls an external warning device. Activated only when in the Entrapment Mode.	Relay 1
11	Unauthorized Vehicle Entry output (Tail gate alert)	Controls an external warning device. Activated when a second vehicle enters from the outside without a valid input from an access control device. This output releases when an access control input signals open or the arm/gate reaches the close limit.	Relay 1
12	Outside Obstruction Vehicle Detector output	Interlocks an entry device to prevent pedestrian use. This output is active whenever the Outside Obstruction Loop Detector is tripped.	Relay 1
13	Loitering Alert	Indicates a vehicle is loitering on the Outside Obstruction Loop. Adjustable from 0 seconds with 15 to 135s selectable delay timeframes in 30s increments. **NOTE:** LT LOITERING ALERT adjustments can be made in the Installer Menu. The LT Installer Menu display only appears when using this relay.	Relay 1 or 2
14	Gate nearing full travel output	Applies to operators with position/proximity sensors only. This output is used to reduce the sensitivity of a proximity sensor near the ends of gate travel. Activated when the gate is 3s (approx. 3 ft) from expected limit switch trigger (full travel in both the open and close directions). **NOTE:** If the operator has not yet learned limits, it will energize Relay 14 when the motor begins moving the barrier arm.	Relay 1
15	Gate failure output	Activated to report occurrence of a problem. Indicates the system is in an Error Mode, Fault Mode or Entrapment Mode. If the relay is active, the gate is disabled.	Relay 1
16	Motor Running output	Active when the motor is running and gate is in motion.	Relay 1
17	AC Power Failure output	This relay is normally energized and drops with loss of AC power.	Relay 1

Table 6: Programmable User Relays			
Relay No.	**Name**	**Description**	**Wire Connection**
18	DC Power Failure output	**DC operators only.** The relay activates when the battery power is very low, but the output ceases when the battery is dead. The relay is triggered when the battery is less than 20 volts.	Relay 1
19	Flasher Relay	Flashes lights once per second. The relay is constantly pulsing except when the open limit switch is triggered. * Preferred connection is Relay 2, a solid state relay.	Relay 1 or 2*
20	Free Exit Loop Vehicle Detector output	Active when the Free Exit Loop is tripped.	Relay 1
21	Inside Obstruction Vehicle Detector output	Active when the Inside Obstruction loops is tripped.	Relay 1
22	Reset Loop Detector output	Active when the Reset loop detector is tripped.	Relay 1
23	External Latching Gate Lock Output	Not used in the Smart DC Controller.	Relay 1
24	Gate at Partial Open Position	Active when the partial open position is reached or exceeded.	Relay 1
25	DC Power Alert	Deactivates when the software detects a low battery voltage (below 21VDC, but greater than 18VDC) for a duration of 2 seconds or more. To slow battery drain, accessory power loads are shed.	Relay 1
26	Free Vehicle Detector Pulse	Activates when the Exit Loop Detector is tripped and causes a 250mS pulse output to occur.	Relay 1
27	Not Open (requires AC power)	When AC power is detected, this relay activates when the gate in NOT on the open limit. If AC power fails, or the gate is on the open limit, the relay is deactivated.	Relay 1
28	Flasher (requires AC power)	Controls flashing lights that pulse 500ms per second. The relay is constantly activating except when the open limit switch is triggered or AC power fails.	Relay 1

Revenue Control Parking Applications

Additional mechanical relay options are shown in Table 5. Any of the options can be configured through the relays on the Smart DC Controller. If you need additional mechanical relay terminals, an optional extended relay module with 8 terminals is available from HySecurity.

NOTE: System baud rate: 38,400

Table 7: Programmable User Relays, Revenue Control

Table 7: Programmable User Relays, Revenue Control Parking Applications			
Relay No.	**Name**	**Description**	**Wire Connection**
29	Outer Arming Loop Active Output OALD	Input. Interlocks an entry device to prevent pedestrian use. This output is active whenever the Outer Arming Loop Detector is tripped. **NOTE:** If the Center Loop is tripped before the Outer Arming Loop (indicating a vehicle is exiting the facility), this relay will not energize.	R1, R3 through R10
30	Inner Arming Loop Active Output IALD	If the Center Loop is tripped before the Inner Arming Loop (indicating a vehicle is entering the facility), this relay will not energize.	R1, R3 through R10

Table 7: Programmable User Relays, Revenue Control Parking Applications			
Relay No.	**Name**	**Description**	**Wire Connection**
31	Device Reset Pulse Output	N.O. Input. A 250ms pulse occurs when the Center Loop is triggered. If a back out occurs, this relay sends a reset pulse to the access control device or computer system to invalidate the ticket.	R1, R3 through R10
32	Back Out Pulse Output	N.O. Input. The relay outputs a 250ms pulse when a back out has occurred based on the criteria given in the "Revenue Control Parking Functions."	R1, R3 through R10
33	Inbound Transient/Lot Output	N.O. Input. The relay outputs a 250ms pulse used to increment the transient and total vehicle counts.	R1, R3 through R10 TRANSIENT USER
34	Outbound Transient/Lot Output	N.O. Input. The relay outputs a 250ms pulse used to decrement the transient and total vehicle counts.	R1, R3 through R10 TRANSIENT USER
35	Inbound Tenant Output	N.O. Input. The relay outputs a 250ms pulse and increments the tenant counter when the Tenant User input is activated and OALD, then CLD, are tripped and released. This activity signals a prepaid customer has entered the facility.	R1, R3 through R10 TENANT USER
36	Outbound Tenant Output	N.O. Input. The relay outputs a 250ms pulse and decrements the tenant counter when the Tenant User input is activated and IALD, then CLD, are tripped and released. This activity signals a prepaid customer has exited the facility.	R1, R3 through R10 TENANT USER
37	Inbound Special Output	N.O. Input. The relay outputs a 250ms pulse and increments the special counter when the SPECIAL USER input is activated and OALD, then CLD, are tripped and released. This activity signals a customer has entered the facility.	R1, R3 through R10 SPECIAL USER
38	Outbound Special Output	N.O. Input. The relay outputs a 250ms pulse and decrements the tenant counter when the SPECIAL USER input is activated and IALD, then CLD, are tripped and released. This activity signals a customer has exited the facility.	R1, R3 through R10SPECIAL USER
39	Set aside for Factory Use	HySecurity Testing Only	Do not use

Extended Relay Module Option

The extended relay module provides 8 numbered mechanical relays. R3, RELAY 3 LOGIC through R10, RELAY 10 LOGIC can be accessed through the Installer Menu. Set the number for the relay based on the information found in Tables 4 or 5. Table 5 is oriented toward revenue control parking lot applications.

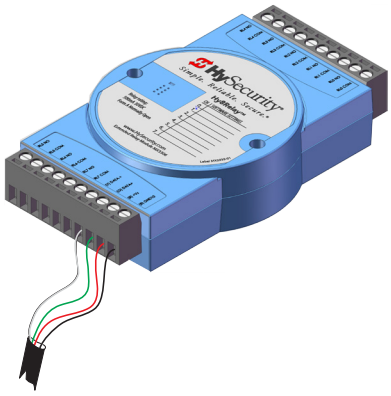

Wire communication cable connections between the DUAL GATE ports, at the base of the SDC, and the extended-mechanical relay module. See illustration*Overview of the Smart DC Controller on page 42*.

Vehicle Detector Installation and Loop Layouts

HySecurity recommends that vehicle detectors be used for free exit and obstruction sensing logic only. The exception is in parking or barrier arm applications where detectors may also be used to close the gate. In applications employing our swing, vertical lift, or sliding gate operators, closing logic cannot be used except when the anti-tailgate logic is employed.

Vehicle detector functions (OR, IR, HD, DL) are configurable through the *Table 4: Installer Menu on page 33*.

NOTE: For in-depth information regarding Hy5B vehicle detectors, click Tech Support on the HySecurity website and follow the link to Installation Manuals.

Anti-TailGate Mode (Closing Logic)

The Detector Logic (DL) installer menu item lets you set the anti-tailgate mode. This menu item works in conjunction with the Close Timer (CT) when the vehicle detector is triggered. If you plan to use the anti-tailgate feature, check the time delay aspect of the Close Timer (CL) setting.

The four selectable modes for DL are as follows:

Mode 1 (Default): An input from either the Free Exit, Outside Obstruction Loop (OOLD), Inside Obstruction Loop (IOLD), or the Center Loop (CLD/RESET/Shadow) will hold the gate open, reset the close timer, and ignore all close inputs. The close timer begins to count down only after all vehicle detectors are clear and no other open command is present.

Mode 2: The close timer does not wait for vehicle detectors to clear, but instead it starts counting down as soon as the open limit is reached.

Mode 3: When both inside and outside obstruction loops are simultaneously active, the gate will close immediately (unless another open command is present) once all vehicle detectors are no longer sensing active loops (i.e. vehicle loops are clear).

Mode 4: Full anti-tailgate logic includes Mode 3 functions. In addition, the gate will stop during the opening cycle when both OOLD & IOLD (reversing loops) are tripped simultaneously. When the OOLD & IOLD loops are cleared, the gate closes immediately. The OOLD & IOLD can be individually set so that, if tripped while closing, the gate may either, pause only or reverse to reopen. The free exit detector input is ignored while the gate is closing.

> **NOTICE:** Using any vehicle detector logic mode other than Mode 1 (default) requires that all the loops be placed with the geometry and spacing as shown in the loop layout drawings. The detector Modes 3 and 4 require use of separate inner and outer obstruction detectors. Mode 4 is not available in HydraWedge SM50 or gate operators functioning with HydraSupply XL.

TailGate Alert

User Relay 11 is available for notification devices. If a vehicle is tailgating, and a flasher or audio device is connected to User Relay 11, the relay will be triggered by the tailgating vehicle crossing the loops. Refer to *User Relays - Programming Procedure on page 47*.

Vehicle Detectors and the Smart DC Controller

The Smart DC Controller provides an interface for up to four different vehicle detector functions.

NOTE: Standard box type 11 pin (24 VDC or 24 VAC) vehicle detectors may be connected in the traditional manner to the controller, but HySecurity Hy5B mini-detector modules plug directly into the board, making field installation much faster and enhancing performance.

The Hy5B detector communicates with the Smart DC Controller microprocessor to achieve the following benefits:

- **Automatic Sensitivity** – The Hy5B monitors vehicle traffic over the loop and automatically adjusts the loop sensitivity based on vehicle type and volume.
- **Automatic Gate Compensation** – The Hy5B discerns gate travel over the loop and automatically compensates for its effect. The compensation allows the Hy5B to operate with a higher sensitivity which provides better detection capability.
- **No Loop Crosstalk** – Exclusive use of Hy5B vehicle detectors in HySecurity gate operators, completely eliminates crosstalk and the need to set frequency levels.
- **Vehicle Counting** – Hy5B detects passenger vehicles and motorcycles.
- **Automatic Lightning Suppression** - Where lightning strikes occur often, connecting to the ground terminal minimizes the chance of activation or lock-up.
- **Health Scores for Loop** – Hy5B monitors the loop for changes that are indicative of possible problems. A score is accessible through the event log, LG menu item.
- **Automatic Hy5A emulation mode** for backward compatibility.

Hy5B Installation

To install an Hy5B vehicle detector, you will need to take the following steps:

- Test the vehicle loop
- To use all the features of Hy5B, update the software version on the gate operator to the latest version using S.T.A.R.T. and a PC laptop. Access free software updates from the HySecurity website: www.hysecurity.com
- Install the Hy5B vehicle detector
- Fully cycle the gate at least 2 times to allow the detector to adjust to the effects of the gate during travel. Drive a test vehicle over the loops.

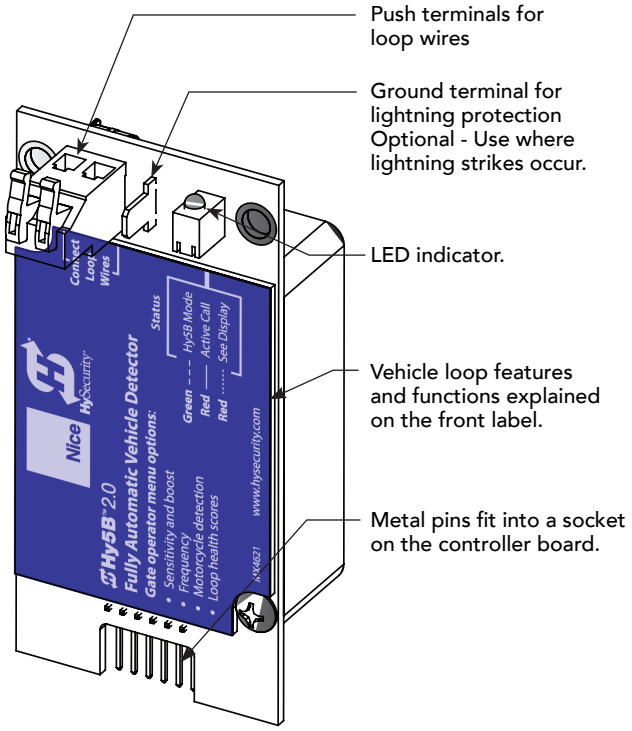

Hy5B Vehicle Detector – front view

Test the Vehicle Loop

Run diagnostic tests on the vehicle loops before installing Hy5B vehicle detectors to ensure the loops are in good working condition. The following tests cannot guarantee a functioning loop, but failure of either test means that the loop may be damaged or need to be replaced.

1. Test – Measure the resistance of the loop and lead-in wire. It should not exceed 4.0 ohms.
2. Test – Measure the resistance to earth ground with a Megohmeter (Megger). It should be 100 Megohms or more. Below 50 mega-ohms, install a new loop.

NOTE: Loops may function at 100 Megohms or less, but will not be reliable (for example, when the ground is wet from rainfall). A low megohm reading on the resistance to earth ground usually occurs due to broken or moisture saturated insulation. Be sure to use wire with a direct burial jacket such as XLPE or XHHW wire. Do NOT use THHN wire.

Check the Version of Software

1. In the field, open the gate operator's Control Box.
2. To view the software version, press the RESET key. To use Hy5B features, the software version must be h4.55 or h5.56 (or later). Otherwise, the Hy5B reverts to Hy5A emulation mode.
3. If you wish to update the software, download the current S.T.A.R.T. software to your PC laptop, and then load the gate operator code to the controller board before installing Hy5B vehicle detectors. See www.hysecurity.com for updates.

NOTE: Hy5A emulation mode does not include all the features of Hy5B. If you are replacing Hy5A detectors and updating the gate operator software, be aware Build Year 1 (BY1) or Build Year 2 (BY2) will need to be addressed. BY2 requires monitoring of external entrapment protection sensors per UL 325 - 2016 Standard of Safety. If the gate operator was installed prior to 2016, BY1 may be used. For more information, refer to the gate operator's product manual.

Install Hy5B Vehicle Detectors

Install one Hy5B detector at a time. Each vehicle detector socket is labeled.

1. Turn power OFF in control box.
2. Insert the squared-off end of the plastic standoff through the hole in the Hy5B detector.

   NOTE: The plastic standoff "squared-off end" does not fit into the mounting holes of the control box. Double check the orientation of squared-off ends.

3. To minimize excessive flexing, keep each Hy5B perpendicular to the control board as you plug it into the Hy5B socket.
4. Secure the Hy5B by inserting each plastic standoff into the chassis.

SmartDC Control Box

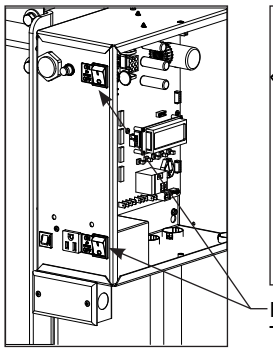

Smart Touch Control Box

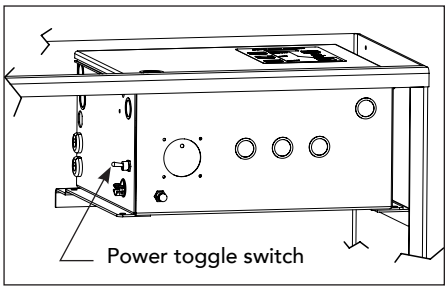

5. Place the two wires from the loop into the push terminals of the Hy5B. For ease of installation, the wire gauge should be 20 - 14 AWG. Refer to *Vehicle Loop Sets on page 54*.

   NOTE: If you have more Hy5B detectors, repeat the steps 2 through 4 for each additional Hy5B detector.

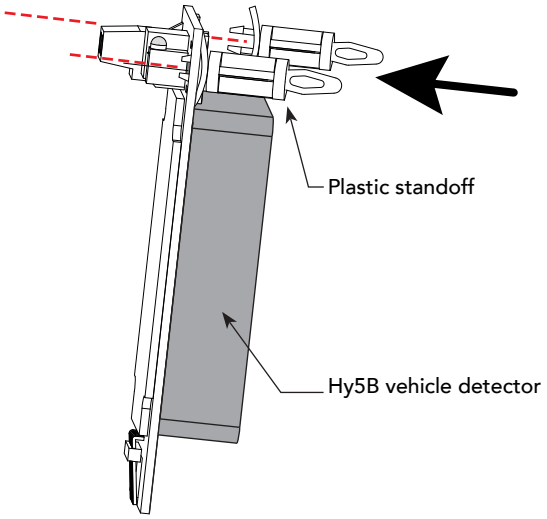

LED Display Status		
LED Activity	**Indicates**	**Condition & Resolution**
OFF	Hy5A mode	Emulation mode. Some Hy5B features are unavailable.
GREEN PULSING	Heart beat	Normal operation.
RED ON	Call Mode	Status indicates loop activation in process.
RED FLASHING	View display for more information: *Initializing* or *Faulty loop*	If initializing, wait until initialization is complete. If flashing during loop operation, take following steps: 1. Check loop wiring. See *Test the Vehicle Loop on page 53*. 2. Replace loop. 3. If loop is not at issue, swap out Hy5B vehicle detector with a known operational Hy5B. 4. If necessary, replace Hy5B.

Vehicle Loop Sets				
Loop Type	**Installer Menu**	**Loops Smart DC**	**Loops Smart Touch**	**Description**
Exit Loop	ELD	EXIT LOOP	FREE EXIT	Opens a fully-closed gate.
Inside Reversing Loop	ILD	INSIDE OBSTRUCTION	INSIDE OBSTR	Connects to the inside reversing loop.
Outside Reversing Loop	OLD	OUTSIDE OBSTRUCTION	OUTSIDE OBSTR	Connects to the outside reversing loop.
Reset/Shadow/Center	SLD/CLD	CENTER LOOP	SHADOW / RESET	Prevents a gate from starting open or closed when a vehicle is in the path of the gate.

5. Turn power to the gate operator back ON.
6. The Hy5B indicator light flashes red and the following appears.

Smart Touch 7-segment Display	STC (OLED) and Smart DC Displays
Init	INITIALIZING

7. When the LED on the Hy5B detector stops flashing red, it begins pulsing green which indicates initialization is complete and the detector is ready for use.

   NOTE: If using Hy5A emulation mode, the LED does not flash green, it goes dark. Refer to *LED Display Status on page 54*.

8. Press the Reset button. *
   When you press Reset, the following occurs:
   - Checks Hy5B loop connections and re-tunes Hy5B to prevent crosstalk
   - Un-installs memory of vehicle detectors physically removed
   - Clears alerts

   NOTE: If the Hy5B is unplugged after it is initialized, an alert appears on the display, ALERT 10. If the issue is not resolved, ERROR 3 appears. When faults of this nature occur, the gate operator functions as if the Hy5B is triggered.

NOTE: * Best Practice: When "re-tuning" Hy5B vehicle detectors, verify that the loops are clear before pressing the Reset button.

CAUTION

Do not connect Free Exit loop wires to the same Hy5B detector co@ntaining obstruction loop wires (reversing loops). You cannot combine Free Exit vehicle detection with reversing loop detection. If you attempt to do so, vehicles crossing over the Free Exit will not be detected.

For more information, refer to the Hy5B User Guide and additional instructional material found online HySecurity website / Tech Support.

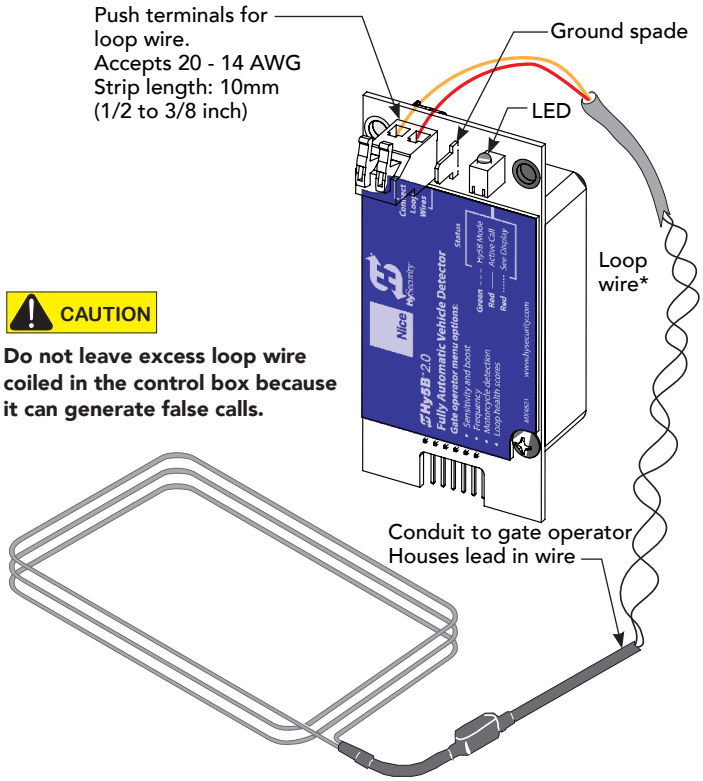

Loops and Hy5B

Installing Standard 11-Pin Box Type Vehicle Detectors

If standard 11-pin box type vehicle detectors are to be used, perform the following procedure.

If there is sufficient space, install the sockets in the control box; if not, then install them in a separate external housing. Carefully consider your peripheral connections. Any peripheral device required for safe gate operation should be attached to 24VDC in case of an AC power outage.

NOTE: Box detectors with relays require five times more power than Hy5x detectors. One Hy5x detector draws about 0.005A. Consider Hy5x vehicle detectors for DC and Solar powered sites.

1. Connect 24 Volt power to the detector. Connect Pin No. 1 to a 24VAC or 24VDC terminal and Pin No. 2 to common.
2. Connect output Pin No. 6 to the Common Bus and output Pin No. 5 to one of the four detector terminal inputs (depending upon the detector function required) on the Smart DC Controller.

If multiple detectors are used, route the power wires and common wire from socket to socket (daisy-chaining) rather than individually running each wire to the same location. The only wires that are separate are the output wire to the Smart DC Controller and the detector loop input wires.

Always keep the detector loop wires well twisted beyond the area of the loop. The lead in portion sealed in a saw cut does not need to be twisted so long as the wires are encapsulated in loop sealant and cannot move.

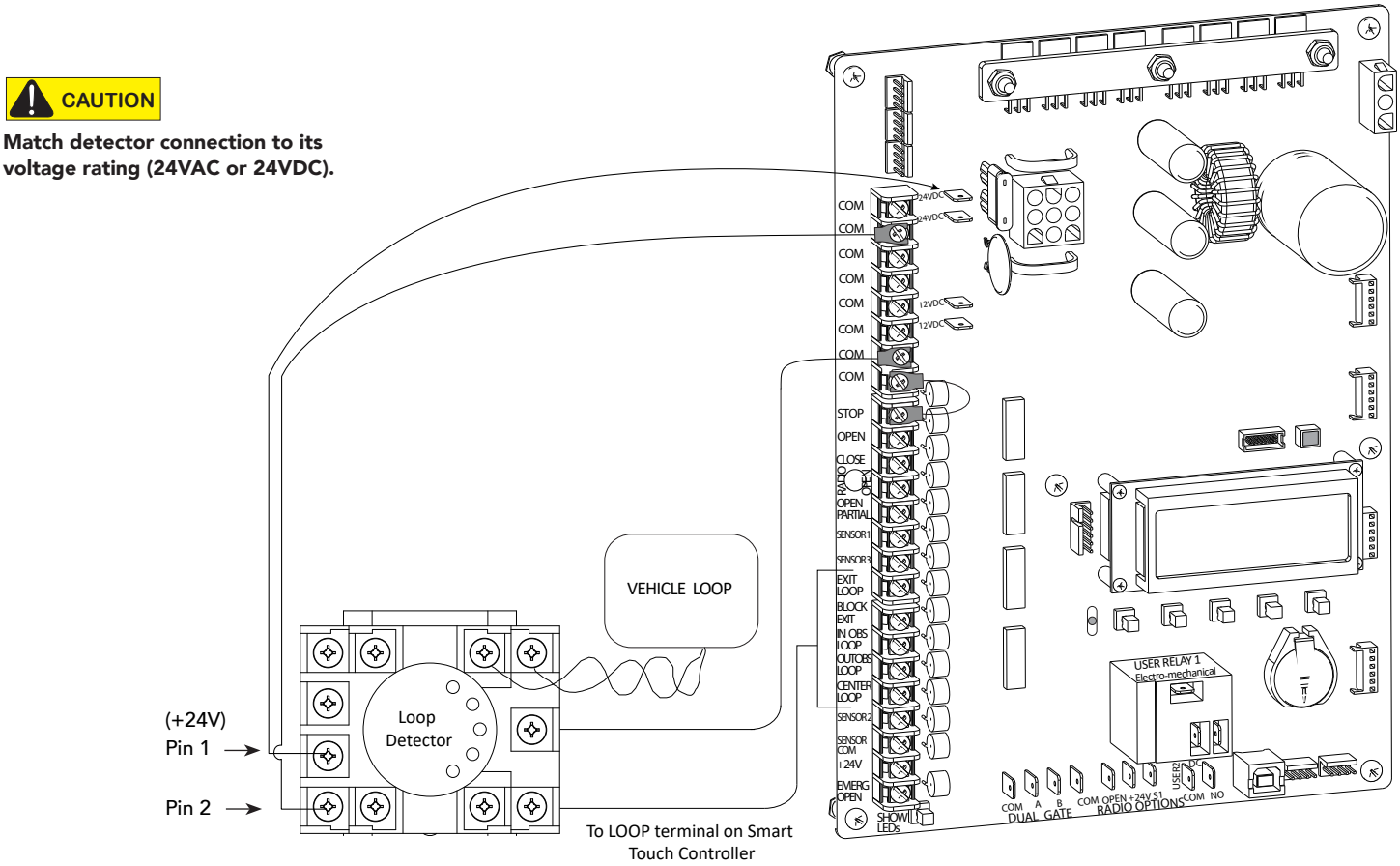

NOTE: Both 24 Volts AC and DC are available, so either detector voltage may be used. 24 VAC is not available if the Gate Operator is equipped with the UPS option. 24 VAC is available at the spade terminals on the lower left corner of our power supply (marked ACC); 24 VDC is available from the Common and the +24 V spade terminals.

StrongArmPark DC Center Loop Layout

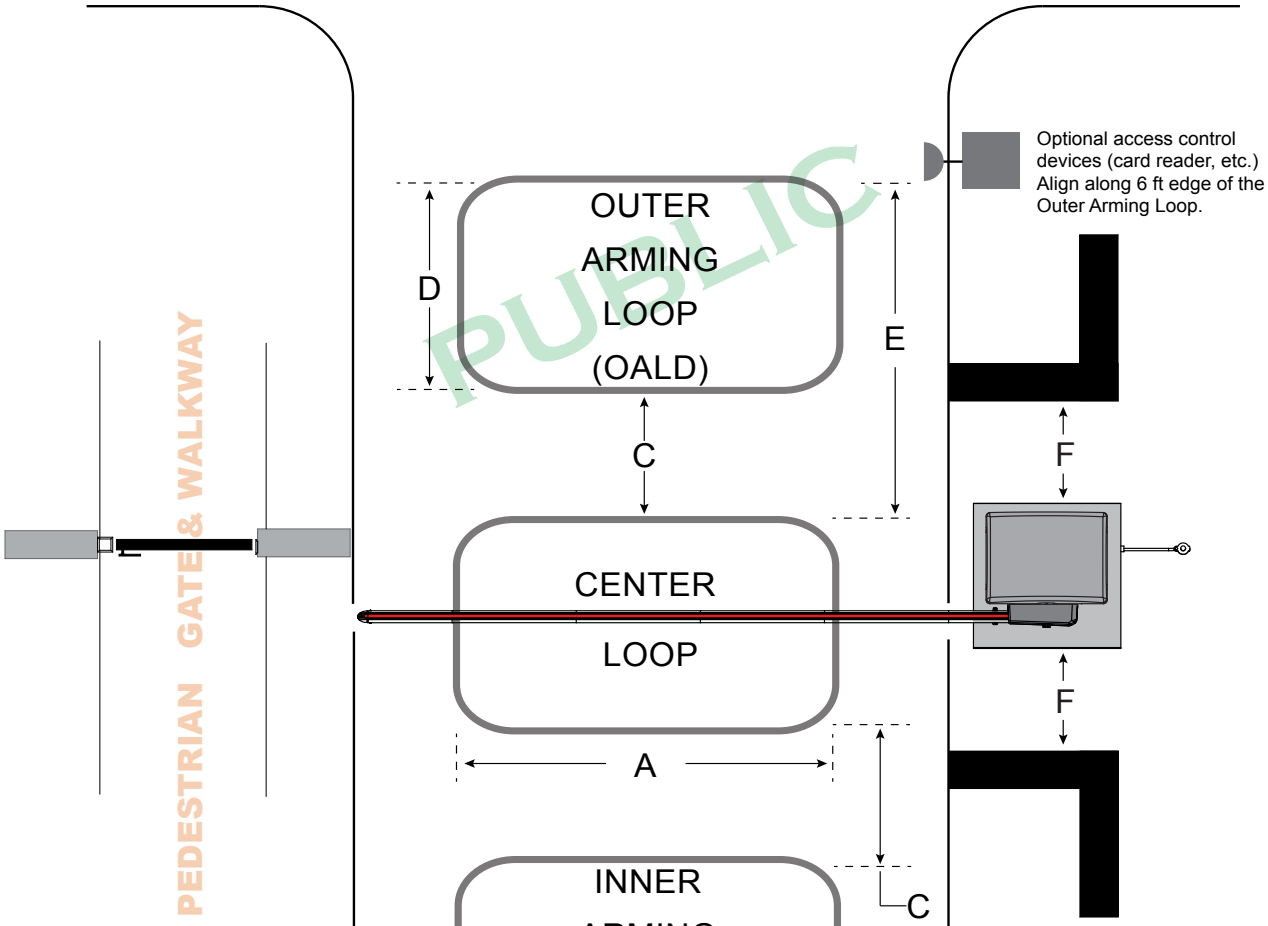

Vehicle Loop: Active

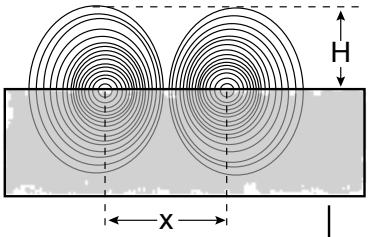

Inductance Field created when Loop is active.

Effective height of loop (H) is 2/3 the distance of X.

To detect higher bed vehicles, keep the short side at 6 ft (183 cm) which creates a 4 ft (122 cm) inductance field above ground.

If tailgating is a concern, a smaller loop is needed, but it may not detect high bed vehicles.

Uni- or Bi-directional Traffic Control

Vehicles must pass from one loop to the next without loss of detection

Dimension “A” = 6 ft minimum to 10 feet maximum (305 cm).

Dimension “B” = 2 ft min. to 4 feet max. (61 to 122 cm) between loop and edge of roadway, is recommended.

Dimension “C” = 4 ft min to 8 ft max (122 to 244 cm). Vehicles must pass from one loop to the next without loss of detection.

Dimension “D” = 2.5 ft (76 cm) to help mitigate tailgating, but may not detect higher bed vehicles.
Dim D = 6 feet (183 cm) to detect higher bed vehicles.

Dimension “E” = 10 to 12 feet (305 to 366 cm) if an access control device is employed.

Dimension “F” = 2 foot minimum clearance (61 cm).

StrongArmPark DC Center Loop Configuration

Two different types of vehicle loop connections are shown in the illustration:

- Hy5x - HySecurity vehicle detector (see *Table 4: Installer Menu on page 33* for more information).
- Generic box detector

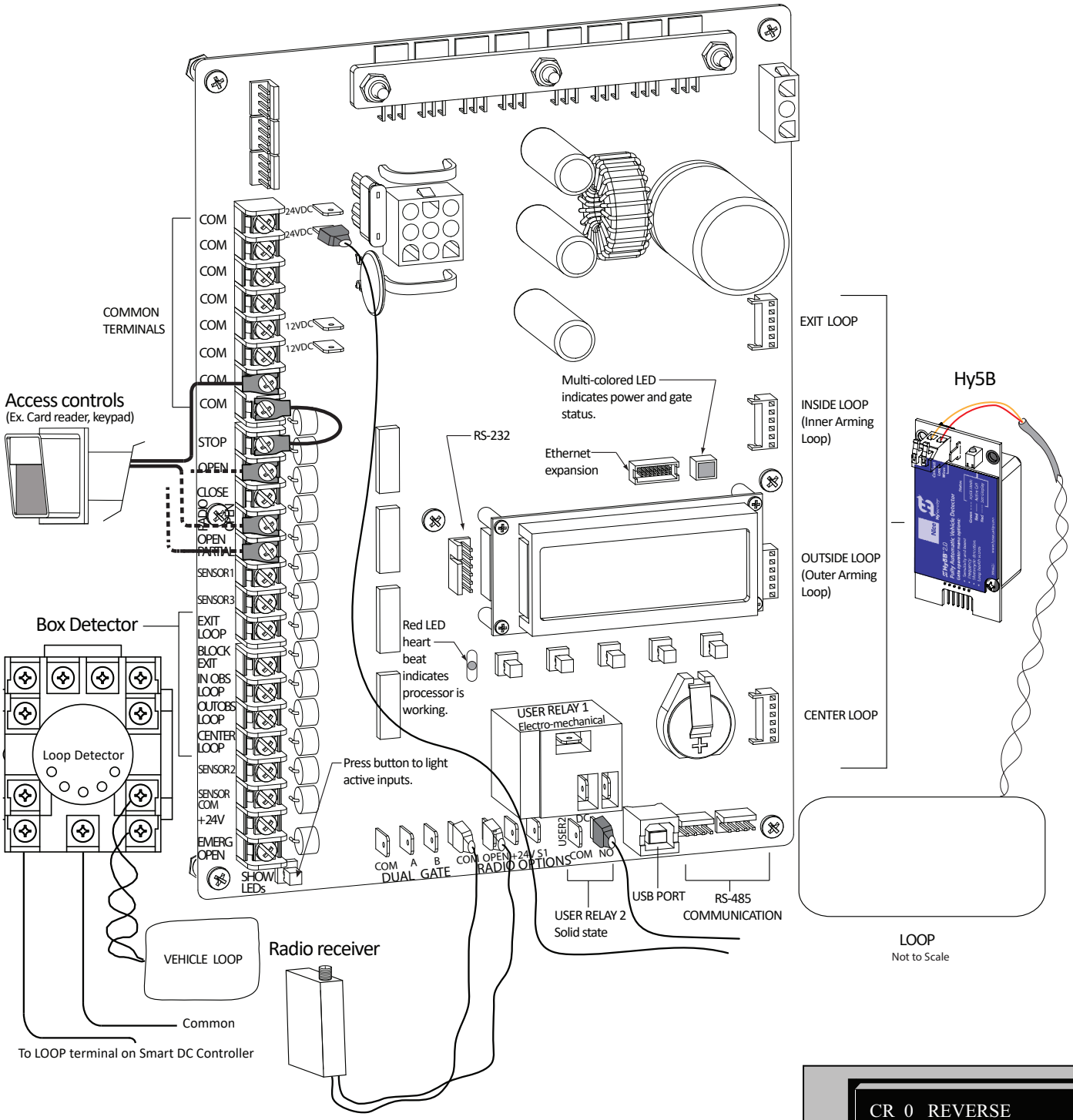

If you have a simple set up, similar to the single center loop diagram on page 7-3, you can change the default from re-opening if the center loop is triggered to only pause when triggered. Closure continues as soon as the loop is clear again. See the "CR" menu item in the *Table 4: Installer Menu on page 33*.

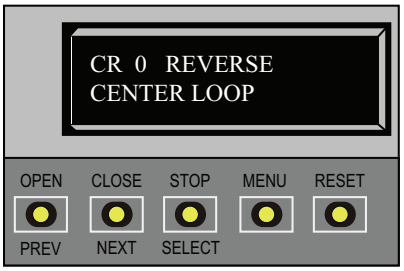

Sequenced Gates #1: Loop Layout

StrongArmPark DC Loop Layout

1

To sequence the gates,set the Installer Menu item, SG to "1" in both gate operators.*

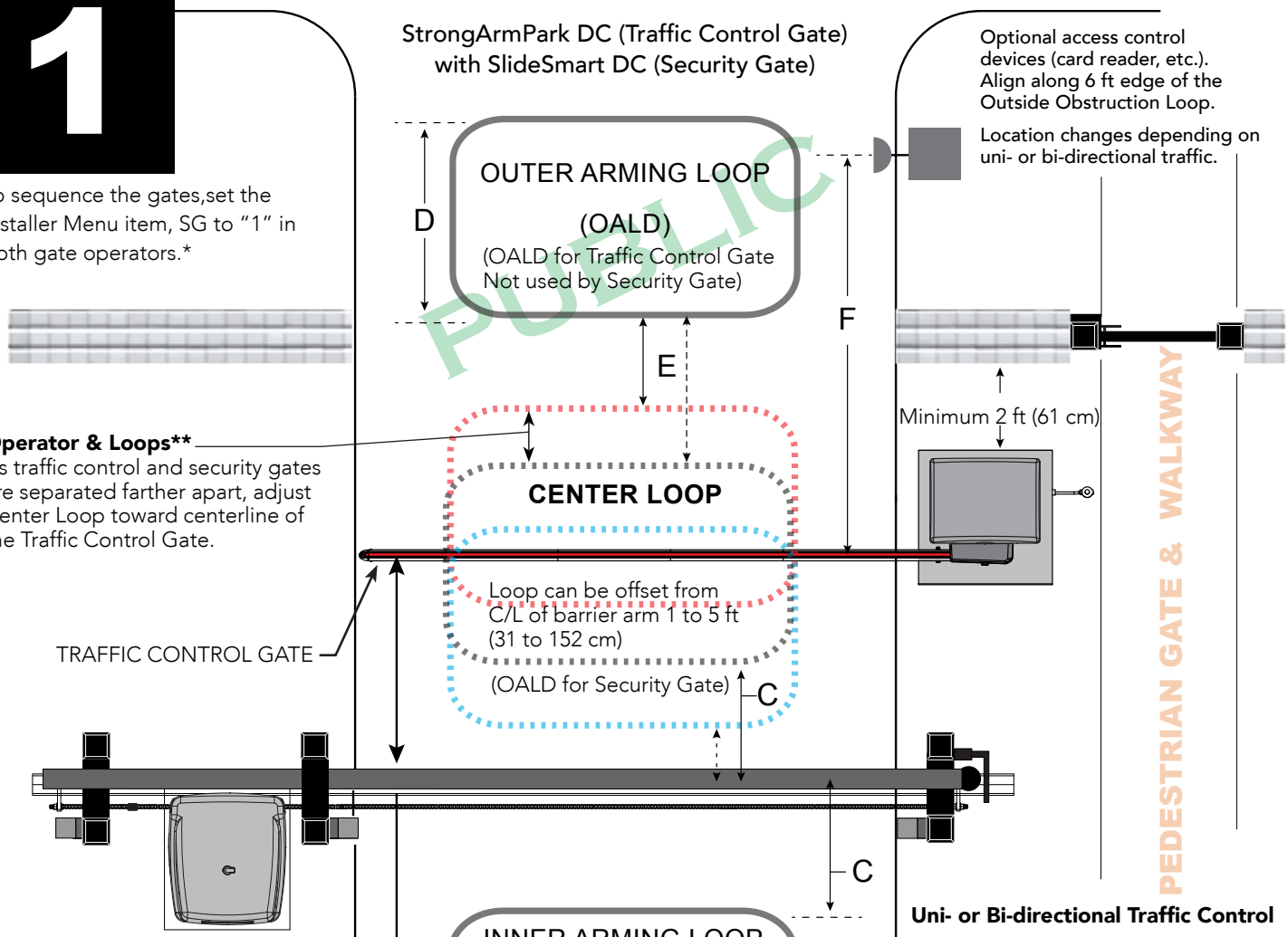

Operator & Loops**
As traffic control and security gates are separated farther apart, adjust Center Loop toward centerline of the Traffic Control Gate.

Uni- or Bi-directional Traffic Control

Vehicles must pass from one loop to the next without loss of detection.

Dimension "A" = 6 ft minimum to 12 ft maximum (183 to 366 cm).

Dimension "B" = 2 ft minimum to 3 ft maximum (61 to 91 cm).

Dimension "C" = 3 ft min. to 4 ft max. Distance from edge of Center Loop to C/L of the Security Gate is 3 to 4 ft.

Dimension "D" = 6 ft (183 cm).

Dimension "E" = 4 ft min. to 8 ft (122 to 244 cm) max. Center Loop can be offset from C/L of gate:1 to 5 ft (31 to 152 cm).

Dimension "F" = 10 to 15 feet (3 to 3.6 m)

***NOTICE**

For sequenced gates to operate properly, all vehicle detectors must be wired to the Traffic Control Gate.

If a communication failure occurs, an AL22 (Alert 22) appears and the buzzer sounds. The Traffic Control Gate maintains functionality whilethe Security Gate defaults to open until communication is restored (or the Security Gate is manually closed).

****NOTICE**

Center to center between gates:
4 ft minimum (122 cm)
9 ft maximum (274 cm)

Drawings not to scale.

Sequenced Gates #2: Loop Layout

StrongArmPark DC Loop Layout

2

To sequence the gates,set the Installer Menu item, SG to "2" in both gate operators.*

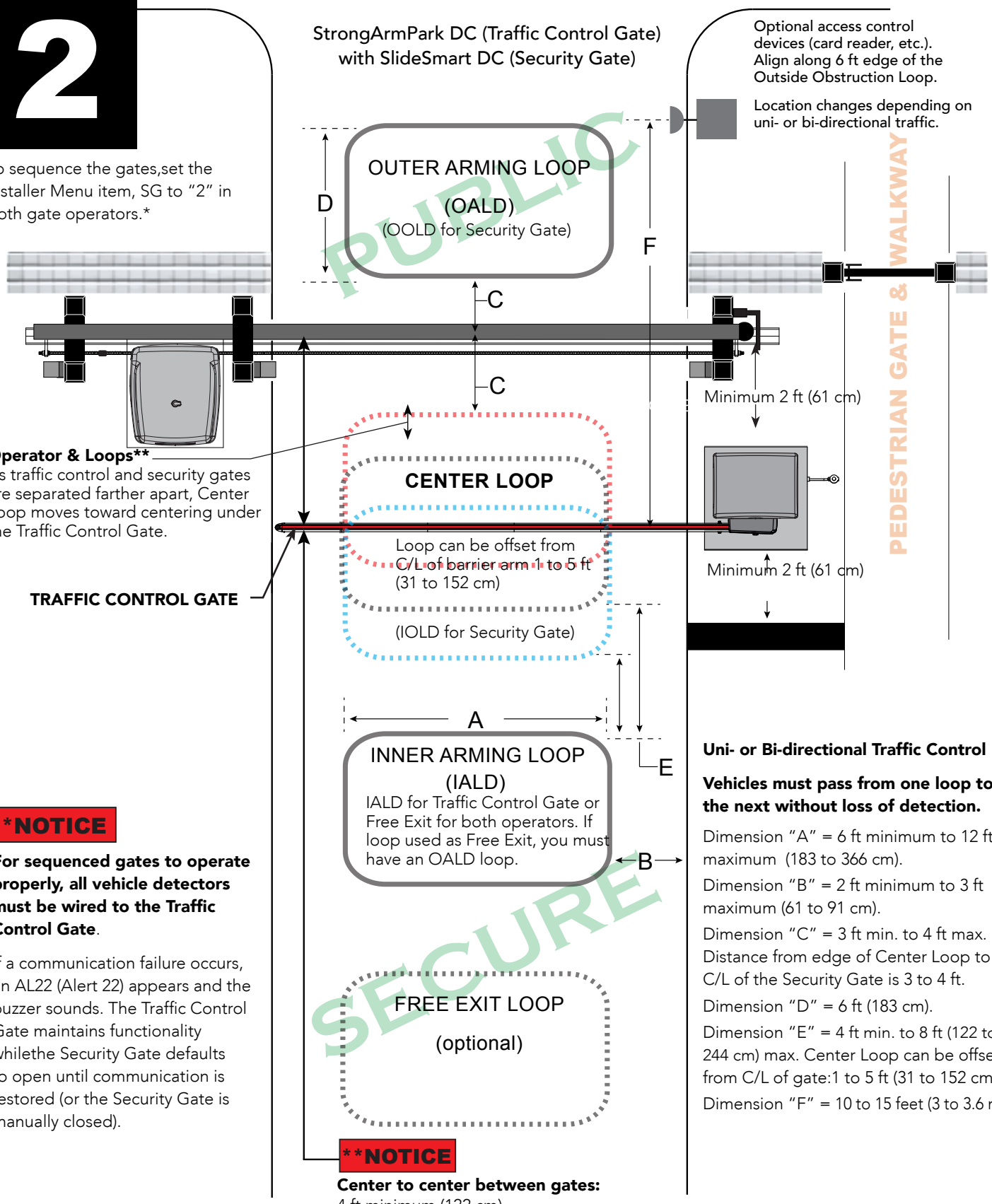

Operator & Loops**
As traffic control and security gates are separated farther apart, Center Loop moves toward centering under the Traffic Control Gate.

TRAFFIC CONTROL GATE

Uni- or Bi-directional Traffic Control

Vehicles must pass from one loop to the next without loss of detection.

Dimension "A" = 6 ft minimum to 12 ft maximum (183 to 366 cm).

Dimension "B" = 2 ft minimum to 3 ft maximum (61 to 91 cm).

Dimension "C" = 3 ft min. to 4 ft max. Distance from edge of Center Loop to C/L of the Security Gate is 3 to 4 ft.

Dimension "D" = 6 ft (183 cm).

Dimension "E" = 4 ft min. to 8 ft (122 to 244 cm) max. Center Loop can be offset from C/L of gate:1 to 5 ft (31 to 152 cm).

Dimension "F" = 10 to 15 feet (3 to 3.6 m)

***NOTICE**

For sequenced gates to operate properly, all vehicle detectors must be wired to the Traffic Control Gate.

If a communication failure occurs, an AL22 (Alert 22) appears and the buzzer sounds. The Traffic Control Gate maintains functionality whilethe Security Gate defaults to open until communication is restored (or the Security Gate is manually closed).

****NOTICE**

Center to center between gates:
4 ft minimum (122 cm)
9 ft maximum (274 cm)

Drawings not to scale.

Photo Eye Installation

A monitored connection tests for the presence and correct operation of the photo eyes (and other monitored sensors) prior to each gate activation. The monitored connection prevents gate operation if an entrapment protection sensor is missing or any fault is present.

Sensors, such as gate edges and photoelectric beams, must be installed to protect against entrapment. These external entrapment protection sensors are required for the gate installation to be in compliance with the 2016, UL 325 Standard of Safety (6th Edition).

NOTICE: UL 325 Standard of Safety provides the MINIMUM safety standards. Site, gate hardware usage, and other conditions may dictate the use of additional safety designs/components. It is up to the gate system designer and installer to assess appropriate safety design and components above and beyond minimum UL 325 and ASTM F2200 Standard of Safety. Always check your local area codes and comply with all regulations.

NOTE: Visit www.hysecurity.com/gatesafety for more information on UL 325 standards and gate safety.

To learn more about external entrapment *protection* devices or to learn how to temporarily supply power to the sensors that are wired to the gate operator, review UL325 Approved External Entrapment Proection Sensors List on page 9.

For barrier arm gates, see UL325 Approved External Entrapment Proection Sensors List on *page 8*.

Photo Eyes (Non-Contact) Installation

Plan to integrate photo eyes (photoelectric sensors) in your site plan. Photo eyes are wired to the Controller and require low voltage conduit to the operator and power supply. Refer to UL325 Approved External Entrapment Proection Sensors List on page 9.

Understand your site requirements and use the layout diagrams available to determine the most appropriate mounting positions for additional photo eyes. The Controller has three sensor inputs.

If there are no other external entrapment protection sensors, then for slide gates, swing gates or any site that must comply with UL 325 monitored entrapment protection regulations, it is highly recommended that at least two photo eyes are installed to serve and reverse the gate in each direction of travel (Open and Close directions).

The two common photoelectric sensor types are thru-beam and retro-reflective; each has its advantages.

- A thru-beam sensor is generally more powerful and able to function more reliably in inclement weather.
- A retro-reflective sensor (generally less reliable in inclement weather or low visibility) provides convenience due to minimal wiring.

  NOTE: In an outdoor environment (because of reduced performance), avoid using a retro-reflective sensor to span a distance greater than 24 feet (7.3 meters).

Compatibility

The UL 325 standard requires that a photoelectric sensor be laboratory tested and "recognized" under UL 325. In order to be compatible with all HySecurity operators, a photo eye must be rated to function from 24 VDC source power.

A list of tested and approved external entrapment protection sensors (normally closed contacts) that are compatible with HySecurity gate operators can be found online at the following public site: Gate Safety for HySecurity Gate Operators.

Installation

Install photo eyes according to the following steps.

1. Locate the photo eye in line of sight to the receiver or reflector that is mounted to protect zones of potential entrapment.
2. Mount the receivers on the left or right side of the gate operator.
3. Mount the emitters just beyond the travel of the gate.

   NOTE: The installation locations are intended for pedestrian detection. If photo eyes are also to be used for vehicular detection, consider (in addition to the low elevation photo eye for cars) installing another photo eye at a height of about 55 inches (140 cm) to detect semi (tractor- trailer) trucks.

Configuration

Configure photo eyes attached to gate operators manufactured in 2016 or beyond according to UL 325 – Monitored Entrapment Wiring Diagrams.

NOTE: HySecurity gate operators, manufactured with 2016 (or later) in the serial number, require Normally Closed output sensors. Some manufacturers label an output as N.O. (normally open), when it is actually an N.C. (normally closed) contact. Review UL325 Approved External Entrapment Proection Sensors List on page 9 .

If your gate operator is manufactured prior to 2016 and/or your gate operator is set to Build Year 1, consider the following:

NOTE: To check the Build Year for your gate operator, press the Menu button. The gate status scroll reveals the Build Year. "Build Year Pre-2016" means the gate operator is configured for Build Year 1.

1. If the photo eye has an internal switch for setting Light Operate versus Dark Operate, select Light Operate.
2. If the photo eye has a relay output and has both N.O. and N.C. terminals, some experimentation may be required to determine the proper connection because, when its in the Light Operate mode, the output relay is normally energized and releases when the beam is blocked.
3. If the photo eye has a solid-state output, your must choose a sinking-type connection.

Photo Eye Connections: Smart Touch & Smart DC Controllers

CAUTION

All external entrapment protection sensors must be NC sensor outputs and wired to the SENSOR COM terminal for monitoring and powering purposes. The sensor becomes actively powered when the gate operator's motor runs.

Connect the four wires to the receiver and two wires to the emitter according to the following procedure.

A. Supply power to the sensor.

1. Find the +24V spade-terminals inside the inputs edge or use +24V from RADIO OPTIONS located at the base of the SDC Controller. (If connecting to STC, obtain the +24 Volt source power at one of the three spade-terminals on the STC Power Supply Board.)
2. Obtain the 24 Volt Common from SENSOR COM on the Controller.

B. Wire connection so the controller recognizes the sensor device.

3. For the relay output, obtain the COM along the SDC inputs edge (or from the STC Power Supply Board on an STC).
4. Connect the N.C. output to SENSOR 1, 2, or 3.
5. Configure the Installer Menu according to your site device set up. Refer to UL 325 – 2016, Monitored Entrapment Wiring Diagrams.

NOTE: Jumper between terminals on Photo Eye sensor so you don't need to pull a fourth wire to the Controller terminal.

Photo Eye Function

If the gate is stationary, a tripped photo eye will prevent the gate from starting in either direction. If tripped while in motion, the standard function is to pause the gate motion and then automatically restart again if the photo eye is clear within five seconds. Optional settings exist in the Installer Menu. Refer to Eye Close Logic and Eye Open Logic (EC and EO) in *Table 4: Installer Menu on page 33* for more information.

Retro-Reflective Photo Eye Systems

Correct installation and alignment of a retro-reflective photo eye and its reflector is important for trouble free performance. Any system operating at a range greater than 16 feet is more prone to false triggering due to dirty optics, condensation or poor weather. If care is taken in the initial mounting and alignment of the 3-inch reflector, the chance of problems is greatly reduced.

NOTE: Use only through beam photo eyes for a distances greater than 24 feet because the function of a retro-reflective photo eye will be too unreliable.

Taking steps to protect the photo eye and the reflector from being exposed to fog and being absolutely certain the photo eye is perfectly aligned will greatly reduce any false triggering of the system. The ideal mounting of a retro-reflective photo eye is inside an enclosure.

Ideally the reflector mount suspends the reflector inside a 12-inch long piece of 3-inch PVC conduit. Cut the opening of the PVC conduit at a 45-degree angle to act as a drip shield. Hold the reflector against the backside of the PVC conduit by attaching a 3-inch male connector. **DO NOT** cement the connector as doing so makes it difficult to reach the reflector for future cleaning.

To create a mounting base, attach a 3-inch aluminum flange (for example, an electric meter hub) to the connector. This whole package can be mounted to any flat surface.

Locate the reflector in the center of the invisible beam of infrared light to achieve the most sensitive alignment.

The beam center is determined by the following test:

1. While holding the reflector in your hand, slowly raise it until the beam is no longer returned and the photo eye trips.
2. Mark this maximum height.
3. Lower your hand and determine the lower limit of the infrared beam by watching for the trip point. Mark this position.
4. Repeat the same procedure for left and right at the center elevation of the beam.

When the four parameters are marked, either:

- Mount the reflector in the center of the area outlined

or

- Realign the eye for the position of the reflector.

NOTE: If the photo eye is realigned, be sure to perform the centering test again to verify that the reflector is truly in the center.

Photo Eye Alignment Feature

Most photo eyes require careful optical alignment in order to aim the emitter beam to the center of the receiver or reflector. In order to avoid false triggering, it is important to carefully align the system.

Align the photo eyes using this feature by taking the following steps:

1. Access the User Menu and select PE.
   To access the User Menu, press the Menu button twice. For a refresher on using the Menu Mode navigational buttons, refer to the chart below.
2. Press NEXT and continue to press NEXT until PE 0 (OFF) appears.
3. Press SELECT.
   PE characters begin blinking.
4. To turn ON photo eye alignment and temporarily power the sensors, press NEXT so PE 1 (ON) appears.
5. Press SELECT.
   PE stops blinking.
6. Move the photo eyes (up/down, side to side) to align the emitter beam.

Audible Chirp	Beam Aligned ??
One	No
Two	Yes

7. When the buzzer chirps twice, indicating the photo eyes are aligned, set the next photo eye (if the site has one) and continue the process until all photo eyes are aligned.
8. Press MENU to exit Menu Mode and return to Run Mode.
9. Move the gate with an open or close command. When a limit is triggered, the User Menu item PE resets to zero (OFF).

Smart DC Controller: Menu Mode Navigation Buttons

To access Menu mode	To change menu item appearing in the display	To navigate through the menu item selections	To choose what item appears on the display	To navigate between menu items
Press the Menu button twice.	Press Select. Two left characters blink.	Press Next or Previous. Continue pressing Next to view all selections.	Press Select. Blinking characters become static.	Press Next or Previous. Advance - press Next Previous - press Previous

Troubleshooting

The Smart DC Controller reports system malfunctions using three simultaneously occurring methods:

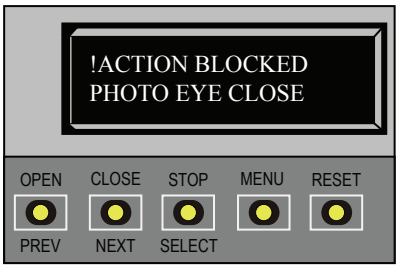

- Codes presented on its display (alert, fault or error)
- Activation of a buzzer which emits a series of chirps at defined interval
- Gate travel stops

Refer to Table 3, *Table 8: Troubleshooting Codes on page 67*, for details concerning identification and description of Alerts, Faults and Errors.

To help in problem-solving, the active status of each input on the controller is indicated by its associated LED.

- On AC-powered gate operators: Active-input LEDs are always illuminated.
- On solar-powered gate operators (with input power OFF): Press and hold the Tact button to illuminate the active-input LEDs.

NOTE: A qualified technician may troubleshoot the operator with the aid of the information and procedures that follow. If it is necessary to call a distributor for assistance, be sure to have the model and serial numbers available. Other helpful information is the job name, approximate installation date, and service and records of any recently-performed maintenance work.

System Diagnostic Messages

Code	Priority	How to clear
ALERT	Low	Enter a new command such as Open or Close.
FAULT	Medium	Press the Stop or Reset button
ERROR	High Serious issue that may require Technical Support.	Errors can only be cleared by pushing the Reset button or cycling power.

NOTE: The green LED near the display on the Smart DC Controller is the "fault indicator" of the processor. A steady green LED indicates the system is receiving power and operating in Run mode. When a fault, error, or alert occurs, it turns RED. A yellow LED indicates Menu mode.

The Smart DC Controller maintains self-diagnostics. Specific codes appear on the display and the Audio Alert buzzer emits distinctive chirping sounds. Any Alert, Fault, or Error is logged into memory and stamped with the date and time. These diagnostic messages can be retrieved for analysis purposes via optional PC-based S.T.A.R.T. software or through the Event Log if your operator is using software version h5.52 or higher. Refer to *Access the Event Log through the User Menu on page 67*.

NOTE: S.T.A.R.T. configuration and diagnostic software is available at no charge from www.hysecurity.com. Schedule software updates as part of routine maintenance. Refer to *"General Maintenance"* section.

Table 8: Troubleshooting Codes

Table 8: Troubleshooting Codes				
Alert/Fault/Error Display	**Type**	**Buzzer**	**Possible Cause**	**Suggested Corrective Action**
ENTRAPMENT MODE	ALERT	4 to 5 chirps/s for 5 minutes or until cleared	Occurs when the inherent sensor is tripped when the gate is already in Safe Mode. The operator will not function until it is reset, which can occur by: • An Open or Stop command • A Reset button command or a Fire Open command. With any one of these inputs, the operator will return to Safe Mode. Barrier arm binding or wind can cause a false alert.	1. Remove the obstruction. 2. **Correct the gate hardware or temporarily, remove the arm in high wind conditions.**
SAFE MODE	ALERT		Occurs when either the edge sensor or inherent sensor has been tripped. In Safe Mode, the automatic close timer is disabled, but any command will reset and/or start the gate in motion. Safe Mode clears when full travel is reached or the RESET button is pressed. Note that too tight of a spring on the DC14, hardware binding, or wind can cause a false alert.	1. Remove the obstruction. 2. **Correct the gate hardware.** 3. **Adjust spring tension on a StrongArmPark DC14**
NO AC POWER	ALERT	Chirps once whenever the gate reaches the close limit	AC power is shut off at the source (breaker) or is not connected. The AC power switch on the operator (lower rocker switch) is turned off, or the circuit breaker on the operator has tripped.	1. Have a licensed electrician check the wiring. 2. **Connect AC power to the operator.** 3. **Reset circuit breaker at electrical panel. Reset the operator circuit breaker.** 4. **Turn AC power switch on.**
LOW 24VDC	ALERT	Flashes on display 1s every 5s	Occurs when the battery voltage has dropped to less than 22 Volts. At this level, the batteries are 80% depleted. **NOTE:** Functionality of the controller board becomes impaired when the voltage drops below 21 Volts.	1. No AC Power. See above item. 2. **Check all wiring connections. Clean or repair as required.** 3. **Check the following and replace, if necessary:** • Battery condition • Charger failure. Check charger voltage • SDC • Transformer
DEAD BATTERY	ALERT	3 chirps upon any operating command entry	Extremely low UPS batteries – no automatic operation - batteries below 21 Volts. At this level, the batteries are 90% depleted. The gate will automatically open or close depending upon the setting chosen. Gate movement is possible, but limited to push button control until batteries reach 18 V.	See corrective action above.

Table 8: Troubleshooting Codes				
Alert/Fault/Error Display	**Type**	**Buzzer**	**Possible Cause**	**Suggested Corrective Action**
HYSECURITY BAD POWER	ALERT	N/A	Critically low 24V supply power. DC Buss power is below 14V – no control functions will be allowed. This message can occur only on initial start up, if power is critically low.	See corrective action above.
No display, LED blinks	ALERT		Smart DC Controller is receiving power, but battery voltage is very low. Several possible causes: • The AC power has been shut off from the operator for too long and the batteries are drained. • Wiring problem. • Batteries no longer hold a charge. • The Smart DC Controller failed. • Bad transformer.	See corrective action above.
HYSECURITY LOADER	ALERT		Software is currently being loaded.	Wait for software to finish loading.
FORCE OPEN	ALERT 1	2 chirps/s for 30s	The gate has been forced open from a full close limit and is being prevented from re-closing.	Will self-clear after an open or close input.
DRIFT CLOSED	ALERT 2	2 chirps/s for 10 seconds	The gate has drifted closed from a full open limit and is being prevented from re-opening.	Will self-clear after an open or close input.
EXCESS DRIFT	ALERT 3		Gate drift in transit - Advisory only. The alert appears if the gate drifts three times in a five minute period.	High wind factor: Remove arm or open gate. Slide gates: Check the track to make sure it is level.
MOTOR OVERLOAD	ALERT 4	2 chirps/s every 15 seconds	Thermal overload alert. Motor drive heat sink exceeds 210°F. When the alert is triggered, the gate can only "fully open" until the alert is cleared. The alert temporarily disables the operator.	1. Check gate hardware. 2. **Check for properly sized weight/length of gate/arm.** Alert automatically clears when the temperature drops below threshold.
BOTH LIM ACTIVE	ALERT 5	2 chirps/s every 15 seconds	Both limit switches are on at the same time. Possible causes: • Short in wiring • Stuck limit switch • Debris in limit plate area (SwingSmart)	The SDC is seeing both limits tripped at the same time. Repair any wiring issues.
LIM NOT RELEASED	ALERT 6	2 chirps/s every 15 seconds	The limit did not release when the operator was commanded to move. Possible causes: • Broken drive belt. • Hardware holding the arm.	• Check/replace drive belt. • Release any holds on the arm. • Relearn Limits.
FREQ SHIFT FAULT	ALERT 7	2 chirps/s every 15 seconds	An Hy5x vehicle detector: Abnormal frequency change alert. Likely causes are poor integrity of loops or metallic objects within range. The display indicates which detector the alert applies to: Exit Loop (ELD), Inside Arming Loop (IALD), Outside Arming Loop (OALD), Center Loop (CLD).	Check the loop, lead in wires, and roadway for problems. Replace them, if needed.

Table 8: Troubleshooting Codes				
Alert/Fault/Error Display	**Type**	**Buzzer**	**Possible Cause**	**Suggested Corrective Action**
LOOP SHORTED	ALERT 8	2 chirps/s every 15s	An Hy5x vehicle detector: Loop is shorted. Inadequate insulation of loop wires.	Temporarily switch detector to be sure the loop is at fault, and then repair it.
LOOP OPEN	ALERT 9	2 chirps/s every 15s	An Hy5x vehicle detector: Disconnected loop alert. Lack of continuity in the loop wire possibly caused by broken loop wire or wire unplugged from detector.	The loop and lead in wires should be checked for problems or replaced.
I²C BUS ERROR	ALERT 10	2 chirps/s every 15s	An Hy5x vehicle detector: Communications error alert. Hy5x has been removed or there's a lack of integrity of the socket connection. The display indicates which detector the alert applies to: Exit Loop (ELD), Inside Arming Loop (IALD), Outside Arming Loop (OALD), Center Loop (CLD).	Remove and re-install the Hy5x and press RESET. Replace the Hy5x, if necessary. If communication is not re-established within 30 seconds, the controller will reset and the message changes to ERROR 3.
DETECTOR FAULT	ALERT 11	2 chirps/s every 15s	An Hy5x vehicle detector: Malfunction alert Caused by a fault within the Hy5x. The display indicates which detector the alert applies to: Exit Loop (ELD), Inside Arming Loop (IALD), Outside Arming Loop (OALD), Center Loop (CLD).	Remove and re-install the Hy5x and press RESET. Replace the Hy5x, if necessary.
ON TOO LONG	ALERT 12	2 chirps/s every 15s	The Smart DC Controller has an active loop input (Hy5x or box detector output) for more than 5 minutes. The SDC "sees" an active loop for more than 5 minutes. The "active" loop can be actual or false. The display indicates which detector the alert applies to: Exit Loop (ELD), Inside Arming Loop (IALD), Outside Arming Loop (OALD), Center Loop (CLD).	1. Check traffic patterns at the site and make sure that a vehicle is not parked on the loop. 2. **Determine if the loop is stable. An unstable loop can hold the detector in a triggered state.** 3. **The loop and lead in wires should be checked for problems and replaced, if necessary.** 4. **Check sensitivity setting on the detector.**
STIFF GATE	ALERT 13	2 chirps/s every 15s	The SDC detects a gate that, over time, is requiring more power to move it. Usually caused by degrading gate hardware or debris in a slide gate track, this alert appears in the history log. It does not affect opening or closing the gate.	1. Check and correct gate hardware as required. 2. **Check motor brushes for excessive wear.**
STUCK GATE	ALERT 14	2 chirps/s every 15s	The SDC detects that it cannot move the gate at all possibly caused by broken gate hardware or ice/snow buildup.	1. Manually move the gate. Verify that it moves easily and is unobstructed throughout gate travel. 2. **Check and correct gate hardware, as required.**

Table 8: Troubleshooting Codes				
Alert/Fault/Error Display	**Type**	**Buzzer**	**Possible Cause**	**Suggested Corrective Action**
NO TARGET	ALERT 15	2 chirps/s every 15s	The target magnet on the StrongArmPark DC or on the chain (SlideSmart DC) is missing or has not been detected.	1. Make sure target is properly fastened. Did you move it or unscrew it? Is the target magnet or wires to it, broken? 2. Red LED light flashes in the upper left corner of the controller when it senses the target. Did the red LED light flash while opening or closing the gate? If not, target is missing.
BAD COIN BATTERY	ALERT 17	3 chirps at initial power up	The small battery on the SDC is loose or needs replacing.	1. Check for current software, install update, if necessary. 2. Verify that the battery is properly seated. 3. Replace coin battery. 4. Restore power. 5. Press RESET button.
CHANGE BATTERY	ALERT 18	1 chirp a minute	Batteries are not taking a charge properly. The SDC has detected that the 24VDC UPS batteries need to be replaced.	Replace the batteries. (The buzzer will chirp every minute until the UPS batteries are replaced.)
INTLOCK FAILURE	ALERT 22	2 chirps/s every 15 seconds	Interlock/Sequenced Gate communication lost. Appears when the RS-485 communication connection is lost for more than 15s between interlocked (dual gate) or sequenced gate operators.	1. Check cable connections and wiring. Make sure both operators are working properly and have the same current and up-to-date software versions. The alert automatically clears when communication between the two operators is restored. 2. Verify operators are configured correctly. For example, if the operator on site is a solo gate operator and the display code ALERT 22 appears, access the Installer Menu. 3. Verify the Installer Menu items: DG (Dual Gate) and SG (Sequenced Gate) are both set to zero. If gates are interlocked, make sure the DG and SG settings are correct. 4. Upload correct S.T.A.R.T. software and operator code.

Table 8: Troubleshooting Codes				
Alert/Fault/Error Display	**Type**	**Buzzer**	**Possible Cause**	**Suggested Corrective Action**
EXT RELAY FAULT	ALERT 24	2 chirps/s every 15 seconds	Communication issue exists. The extended relay module, Hy8Relay, is not being recognized or it is not connected and values exist in the extended relay menu items. Alert noted in diagnostic log. **NOTE:** Keep your HySecurity gate operators current by "uninstalling" outdated versions of the S.T.A.R.T. application. Be aware that the current operator software code is not compatible with older version of S.T.A.R.T. find the latest software and operator code at www.hysecurity.com	Check the wiring: 1. Make sure the slide switch on the side of the extended relay module is set at "Normal." 2. **(Y) Data + is connected to "A" DUAL GATE.** 3. **(G) DATA - is connected to DUAL GATE.** 4. **Connector cable (4-Pin) attaches to RS-485.** If the Hy8Relay module is not connected, access the Installer menu and check that the extended relays are set to zero. SDC relays = R3 to R10.
MOTOR RUN TIME	FAULT 1	1 chirp every 15s	The Smart DC Controller has detected the motor is on longer than the maximum run time selected. Should not occur in StrongArmPark DC. Possible causes: • Broken drive belt • Taper clamp slipping (SwingSmart)	1. Check and replace drive belt. 2. **Increase Max Run Timer in the Installer Menu.**
PHOTO EYE	FAULT 2	2 chirps/s once per minute	The photo eye is missing or not working. This fault can only occur if the supervised photo eye function is enabled in the Installer Menu.	Correct malfunctioning photo eye.
GATE NO LOAD	FAULT 4	2 chirps/s once per minute	The Smart DC Controller detects there is no load on the operator. The gate is not operational while this fault is triggered. Several possible causes: • DC switch off • Motor wires disconnected	1. Turn on DC power switch. 2. **Replace drive belt.** 3. **Check DC motor wires.** 4. **Press RESET to clear fault.**
LIMIT FAILED	FAULT 5		Not used in StrongArmPark DC.	
STUCK GATE	FAULT 14	2 chirps/s once per minute	The Smart DC Controller has tried 3 times to overcome a stuck gate/arm. The gate/arm is non-operational while this fault is triggered. Caused by broken gate/arm hardware or ice/snow buildup.	1. Check and correct gate hardware as required. 2. **Press RESET to clear fault.**
DIRECTION ERROR	ERROR 1	3 chirps/s once per minute	The Smart DC Controller detects that the operator ran in the wrong direction. Possible causes: • Motor wiring • Limit switch wiring (SwingSmart)	1. Check the following and correct, as needed. • Motor wiring 2. **Press RESET to clear error.**

Table 8: Troubleshooting Codes				
Alert/Fault/Error Display	**Type**	**Buzzer**	**Possible Cause**	**Suggested Corrective Action**
!ACTION BLOCKED PHOTO EYE CLOSE	Photo Eye Close	1 chirp indicates command cannot be initiated	Operator received command to run, but movement is prevented. Photo eye is blocked or battery is dead.	1. Check the following and correct, as needed. • Photo eye path. Realign photo eye. User Menu: PE1, PHOTO EYE ALIGN • Photo eye battery 2. **Press RESET to clear error.**
!ACTION BLOCKED PHOTO EYE OPEN	Photo Eye Open	1 chirp indicates command cannot be initiated	Operator received command to run, but movement is prevented. Photo eye is blocked or battery is dead.	1. Check the following and correct, as needed. • Photo eye path. Realign photo eye. User Menu: PE1, PHOTO EYE ALIGN • Photo eye battery 2. **Press RESET to clear error.**
!ACTION BLOCKED GATE EDGE	Gate Edge Sensor	1 chirp indicates command cannot be initiated	Operator received command to run, but movement is prevented. Gate edge blocked or disconnected. If tripped when gate is moving, causes operator to enter SAFE mode.	1. Check the following and correct, as needed. • Obstructions, remove. • Faulty edge sensor. 2. **Press RESET to clear error.**
HY-5x FAILED	ERROR 3	3 chirps/s once per minute	Hy5x communication failure. Caused by removal of Hy5x or lack of integrity of the socket connection. The display indicates which detector the alert applies to: Exit Loop (ELD), Inside Obstruction Loop (IOLD/IALD), Outside Obstruction Loop (OOLD/OALD), or Center Loop (CLD).	1. Press RESET to clear error. 2. **Remove and re-seat the Hy5x.** 3. **If needed, replace the Hy5x.**

Table 8: Troubleshooting Codes				
Alert/Fault/Error Display	**Type**	**Buzzer**	**Possible Cause**	**Suggested Corrective Action**
MASTER-SLAVE COM	ERROR 4	3 chirps/s once per minute	The Smart DC Controller detects a communication error between master and slave in a dual gate installation. Several possible causes: • Master/Slave communication cable has not been installed correctly. • Master/Slave not configured properly through the Installer Menu. • Operator not properly earth grounded. • Master/Slave communication cable installed in same conduit as high-voltage AC power. • One operator does not have power applied to it. • One operator may have a different software version.	1. Correct communication cable. 2. Verify that each operator is configured properly through the Installer Menu. One operator must be set as Master and the other as Slave using the Installer Menu. 3. Install ground rod per NEC/NFPA standard. 4. Install separate conduit for communication cables. 5. Ensure AC power is present at both operators and all power switches are ON. 6. Check software version in operators by pressing RESET. Make sure both operators are running the same software version.
No display	ERROR 5	3 chirps/s once per minute	The display provides no indication of this error, but it can appear in the S.T.A.R.T. log and means that the Smart DC Controller has detected a serious internal error.	1. Report any instance of this error to HySecurity Technical Support. 2. Turn both power switches off to reset software. 3. Use S.T.A.R.T. to update the operator to the most current software version. 4. Replace Smart DC Controller.
MENU CHECKSUM	ERROR 7	2 chirps/s every 15s	Software issue exists that may require factory reset. Corrupt software or data.	Call HySecurity Technical Support for assistance.
RPM SENSOR	ERROR 8	3 chirps/s once per minute	RPM sensor disconnected. Motor Encoder or wires are damaged or unplugged.	Check wiring from the motor to the Smart DC Controller board.

Table 8: Troubleshooting Codes				
Alert/Fault/Error Display	**Type**	**Buzzer**	**Possible Cause**	**Suggested Corrective Action**
BATT DISCONNECT	ERROR 9	3 chirps/s when detected	The Smart DC Controller cannot identify battery connection. The batteries are disconnected or a wiring fault exists. Automatically resets after one minute.	Smart DC operators ship with a wire disconnected to prevent battery drain. 1. Ensure the red wire's spade connector in the upper left corner of the control box is plugged in. 2. Correct any issues with battery wiring. 3. Check the 35 amp fuse on the circuit board. If blown, replace it.

Adjusting the Dynamic Reversing Sensor

StrongArmPark DC uses a dynamic reversing sensor. A solid immovable object blocking the gate will trip the sensor and cause the operator to stop, reverse and enter safe mode.

Available settings (0, 1, and 2), accessed through the Installer Menu, allow you to adjust the level of sensitivity. A maximum sensitivity of zero (0) is the default setting.

When changing the setting, consider the site design and vehicular gate traffic. It is recommended that you use the most sensitive setting while still allowing for reliable gate operation.

Figure 1: StrongArmPark DC Adjusting the dynamic reversing sensitivity

To adjust the sensitivity, take the following steps:

At a gate status display, press the MENU button twice. The CLOSE TIMER display appears.

Simultaneously, press the OPEN and RESET buttons to enter the Installer Menu.

Release the buttons and the LEARN LIMITS display appears.

Press NEXT until the display, shown in Figure 1, appears. The factory default setting is 0.

Use the SELECT and NEXT buttons to navigate and change the number on the display.

Press SELECT again to accept what appears on the display.

To exit the Installer Menu, press the MENU button. The gate status appears in the display indicating you have returned to Run Mode.

NOTE: On the StrongArmParkDC 14, you can also adjust the spring tension, in combination with the dynamic reversing sensor. A spring that is too tight can cause a false alert.

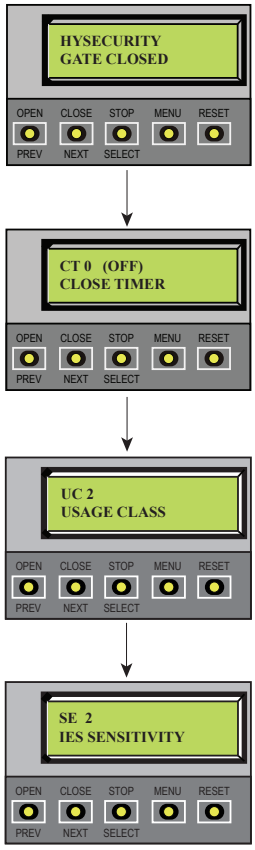

StrongArmPark DC Wiring Schematics

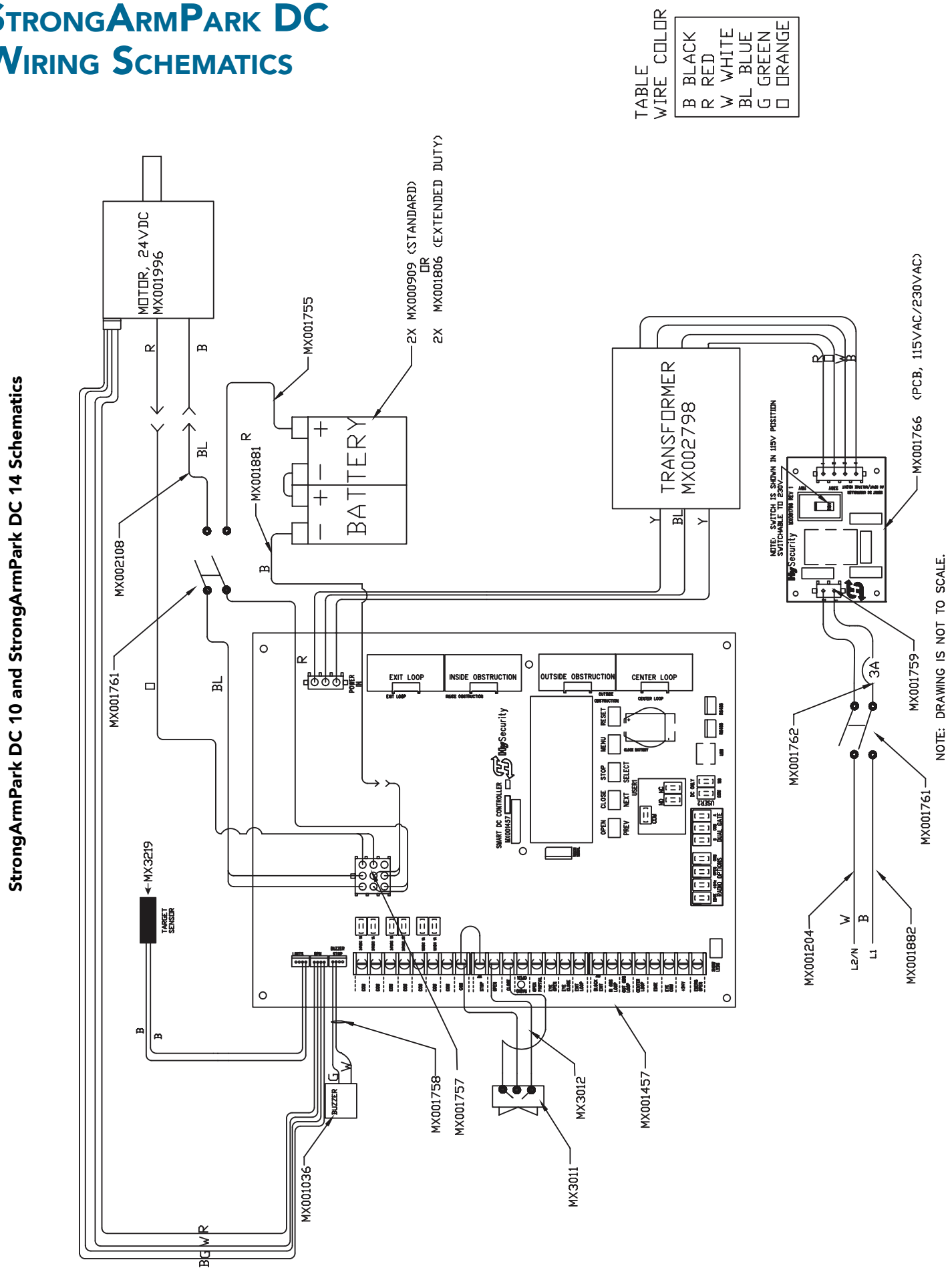

StrongArmPark DC 10 and StrongArmPark DC 14 Schematics

StrongArmPark DC Wiring Schematics - Solar

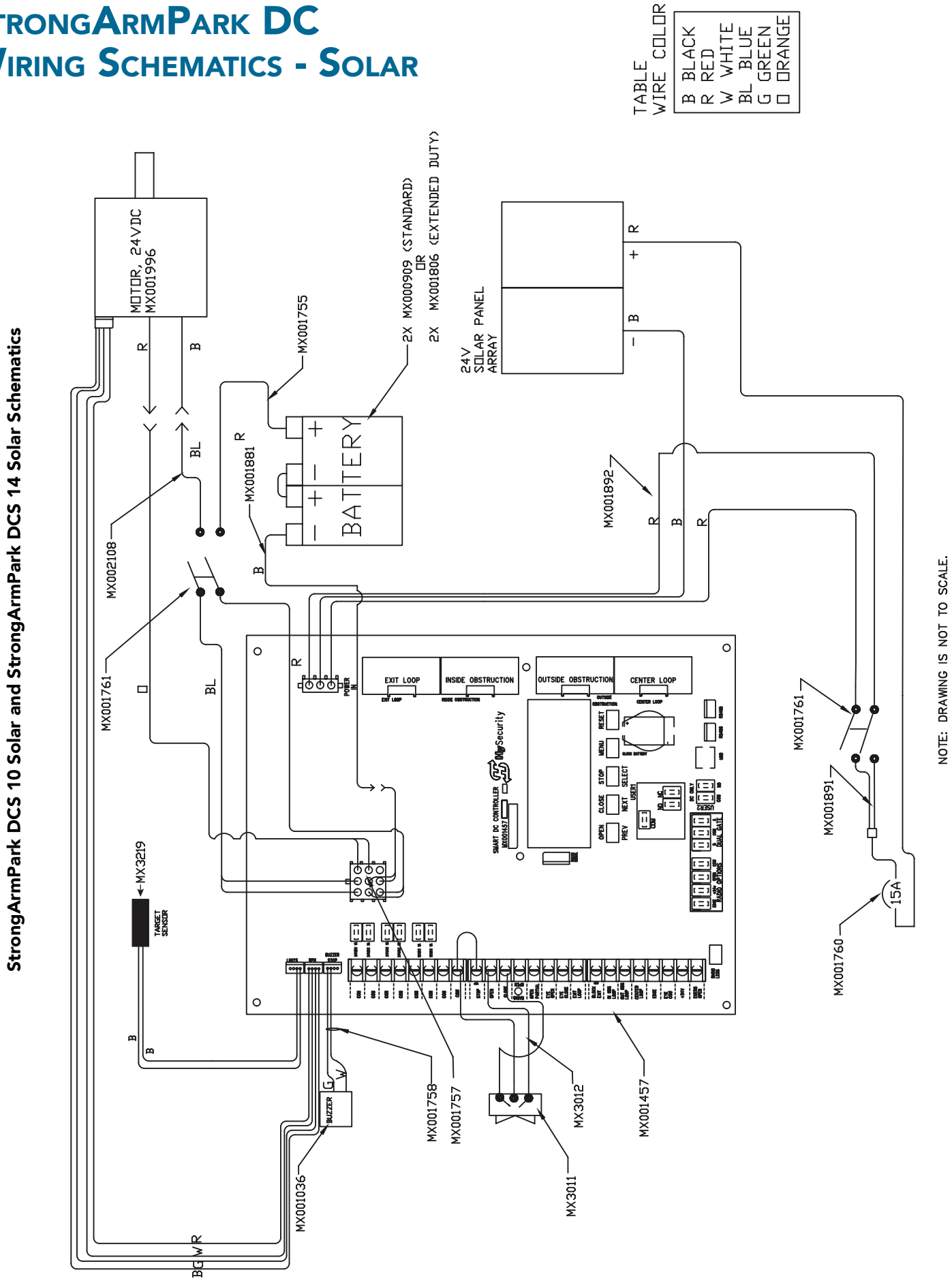

StrongArmPark DCS 10 Solar and StrongArmPark DCS 14 Solar Schematics

Smart Touch Analyze and Retrieve Tool (S.T.A.R.T.)

HySecurity provides Smart Touch Analyze and Retrieve Tool (S.T.A.R.T.) software to help HySecurity gate operator users and installers conduct the following field service activities:

- Configure installer and user menu settings
- View the operator history (event) log
- Display monitored inputs for operator diagnostics
- Load Smart Touch Controller or Smart DC (SDC) software

With S.T.A.R.T. software loaded on your laptop computer, you have an invaluable management tool for all HySecurity operators. The USB port, allows you to download system diagnostics and upload system configurations using the S.T.A.R.T. software. The free S.T.A.R.T. software is conveniently located at www.hysecurity.com. Instructions for downloading S.T.A.R.T. are on the website.

What You Need

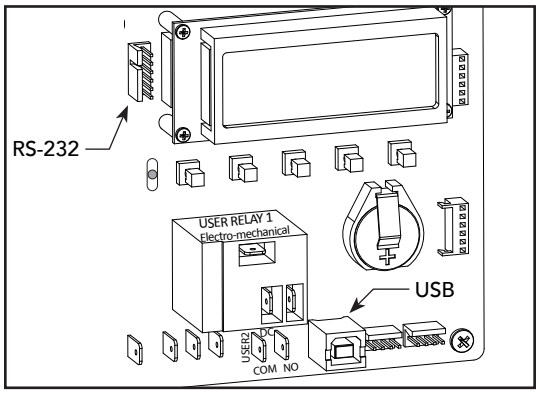

HySecurity Serial RS-232 communication cable with USB adapter and current USB driver.

- Laptop computer with Windows PC operating system (XP, Vista, Win7, Win8, or Win 10)
- Minimum 128MB of RAM
- Minimum 5MB of hard drive disk space
- VGA graphics card (minimum resolution of 800 x 600)

Installing S.T.A.R.T. Software

Read the S.T.A.R.T. User Manual, and then take the following steps to download S.T.A.R.T. software:

CAUTION

The latest version of S.T.A.R.T. is encrypted. An error message will appear stating that the file is corrupt if you try to load new operator code using out-dated S.T.A.R.T. software. Be sure to "uninstall" any outdated versions of S.T.A.R.T. from your laptop and install the latest version from www.hysecurity.com.

1. Bring up your web browser and type https://www.hysecurity.com in the command line.
2. Click Technical Support (left column) on the HySecurity home page.
3. Click Download.
4. Enter your user name and password. If you do not have a user name, register as an online member.
5. Click S.T.A.R.T. Software for Smart Touch and SmartDC to being the software download.

6. Read the End User License Agreement and, if you agree to the terms, click, "**I accept"** (bottom of page).
7. Save the START< >_setup.exe file to your desktop.
8. Double-click the file to begin the installation.
9. Click RUN. A setup window appears.

Software Maintenance

The software on the SDC board is periodically being enhanced with new features that create an easier install and improve the on board diagnostic tools. Be sure to check the HySecurity website for the latest version of software and operator code before heading out for field maintenance.

Electrical Controls

CAUTION

Before servicing, turn off all power switches.

No routine maintenance is needed for the electrical system or controls. If the environment is very sandy or dusty, or has many insects, be certain to seal all holes in the electrical enclosure. Blow the dust out of the electric panel with compressed air. Use the *Table 8: Troubleshooting Codes on page 67* to assess and fix error, alert, and fault codes. If it is necessary to call a distributor for assistance, be sure to have your model and serial number ready. Other helpful information includes the name of the job, approximate date of installation, software version, and the service record of the operator, especially if any work has been done recently.

Clock Battery Replacement

A lithium coin battery supports the clock, so the date and time is retained even when the main power is turned off. Replace the battery about every two years (or as needed) with a DL 2025, DL 2032, or CR 2025, or CR 2032 battery.

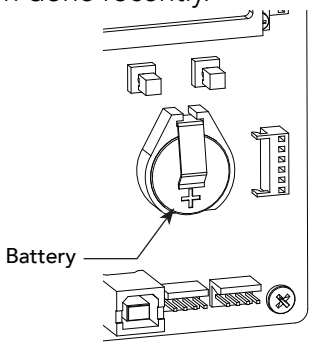

Fuse Replacement

A 35A fuse is located next to the 24VDC power supply inputs on the SDC. It requires no maintenance, but if it were blown due to a power surge or other unusual circumstance, it must be swapped out with a new fuse. The symptoms of a blown fuse appear as a control system malfunction (i.e. all control systems may not work properly).

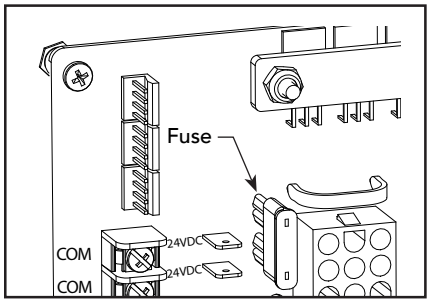

Mechanical Maintenance

CAUTION

Before checking the internal mechanisms of the operator, turn off all power switches.

The StrongArmPark DC mechanical maintenance is not in depth or difficult, but should be performed on a routine basis. The operator chassis is zinc plated, but some environments may speed corrosion of this plating.

Schedule regular maintenance and look for the following:

- Assess that the drive belt has the proper tension. Check for drive belt wear. Fraying edges or missing teeth indicate that the drive belt needs to be replaced.
- Check for signs of rust. If any areas of rust are found, reduce the spread of corrosion by treating the areas with a rust inhibitor.
- Replace worn-out batteries.
- On the StrongArmPark DC 14 spring assembly, apply grease to zerk fitting and upper rod end.

HyProtect™ Breakaway Arm Mount

The breakaway arm fasteners may need to be replaced from time to time. Use the following table to gauge which fasteners should be used.

NOTE: Each bolt is secured with an aluminum lock washer and nylon hex nut. Torque to 15 in-lb.

Breakaway Fasteners

Arm Length	Fasteners	Applies to:
10 ft or shorter	2 nylon bolts	Low wind
10 ft or shorter	1 nylon bolt 1 steel bolt	High wind
10 ft or longer		Low wind
10 ft or longer	2 steel bolts*	High wind

NOTE: *Be aware, when using two steel bolts, that the arm may bend before the bolts break which voids the Warranty.

Drive Belt Tension and Alignment

Proper drive belt tension is important for prolonging the life of the drive belt and maintaining the superior performance of the operator. To check the drive belt tension, take the following steps:

1. Remove the Front Access Panel.
2. Turn off the AC and DC power switches.
3. Remove the StrongArmPark DC top cover and drive belt cover.
4. Check to make sure the pulleys are aligned vertically.
5. With your finger, apply light outward pressure to the drive belt. If it is properly tensioned, it should only move about 1⁄16 to 1⁄8-inch (1.6 to 3.2 cm).
6. To replace or re-tension the drive belt. Loosen the four motor bracket nuts and move the motor accordingly.
7. Retighten the motor bracket nuts.
8. Replace the drive belt cover and top cover.
9. Turn the AC and DC power switches ON. This cycles power which allows the operator to search for the target magnet and "relearn" its limits.

NOTE: Be aware that the arm will cycle open, and then close, as it relearns its limits. If you don't cycle the power, the operator will not "relearn" its limits and will not operate properly.

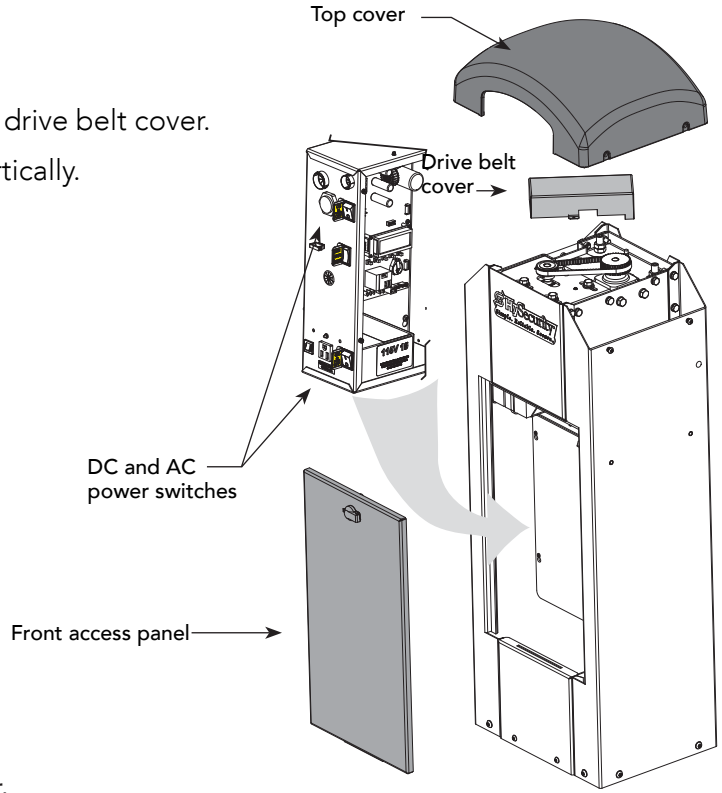

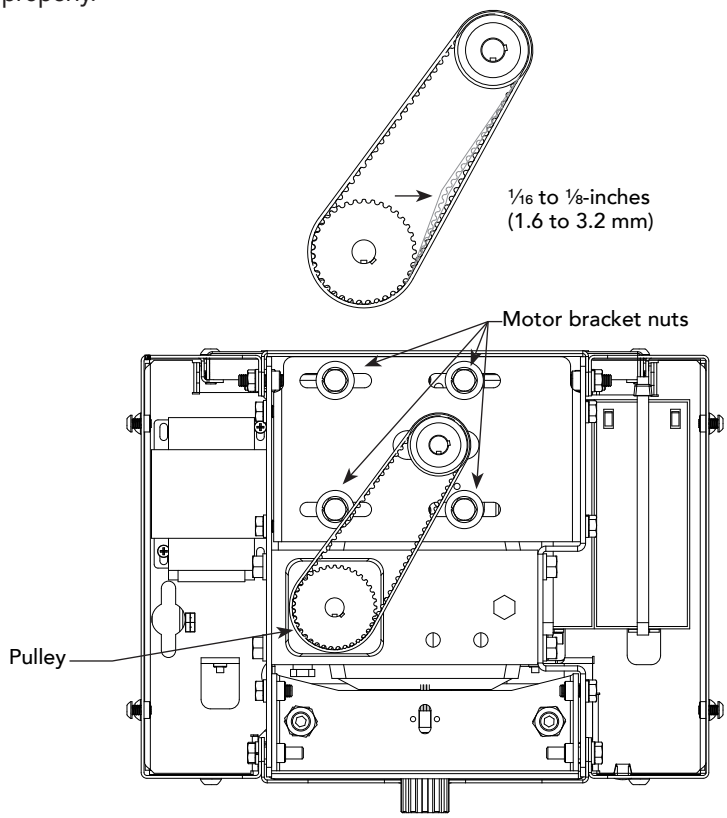

DC Battery Replacement

HySecurity provides a one year warranty from the date of shipment for all batteries supplied with the StrongArmPark DC operator.

Display indicators of a low battery include:

- LOW BATTERY or DEAD BATTERY appears on the Smart DC Controller display which may or may not be indicative of normal discharge.
- ALERT 18 CHANGE BATTERY appears on the Smart DC Controller display. The operator emits an audible chirp every minute to indicate a problem exists.
- AP (#) AC LOSS appears on the Smart DC Controller display. Gate operation is affected by AC power loss depending on customer preferences and the configuration set by the installer in the AP (#) AC LOSS User Menu.

Symptoms of a low battery may include:

- Gate remains locked in the open position
- Gate remains locked in the closed position
- Gate opens five seconds after AC power loss and locks open

CAUTION

Before replacing the batteries, turn off all power switches. Use only AGM batteries as replacements (8Ah - MX002008). The batteries supplied in the StrongArmPark DC operator are state-of-the-art AGM batteries. Do NOT use flooded cell batteries as damage may occur to the unit. Wear protective clothing while working with batteries.

The two 8Ah batteries are accessible within the operator on a tray next to the gear box.

To replace the batteries, take the following steps:

1. Remove the front access panel.
2. Turn off the DC and AC power switches.
3. Remove the top cover.
4. Access the two 8Ah batteries from the top. Cut the two black wire ties holding the batteries to the shelf.
5. Disconnect the red, blue, and black wires as you lift the batteries through the access window.
6. To install the two new batteries, reverse the removal procedure.
   - Install the first battery and connect the black wire.
   - Connect the blue jumper wires between the two batteries.
   - Connect the red wire to the red terminal on the second battery.
7. Replace the top cover.
8. Turn the AC and DC power switches ON. This cycles power which allows the operator to search for the target magnet and "relearn" its limits.

   NOTE: Be aware that the arm will cycle open and close (close or open) as it relearns its limits. If you don't cycle the power, the operator will not "relearn" its limits and will not operate properly.
9. Replace the front access panel and lock it.

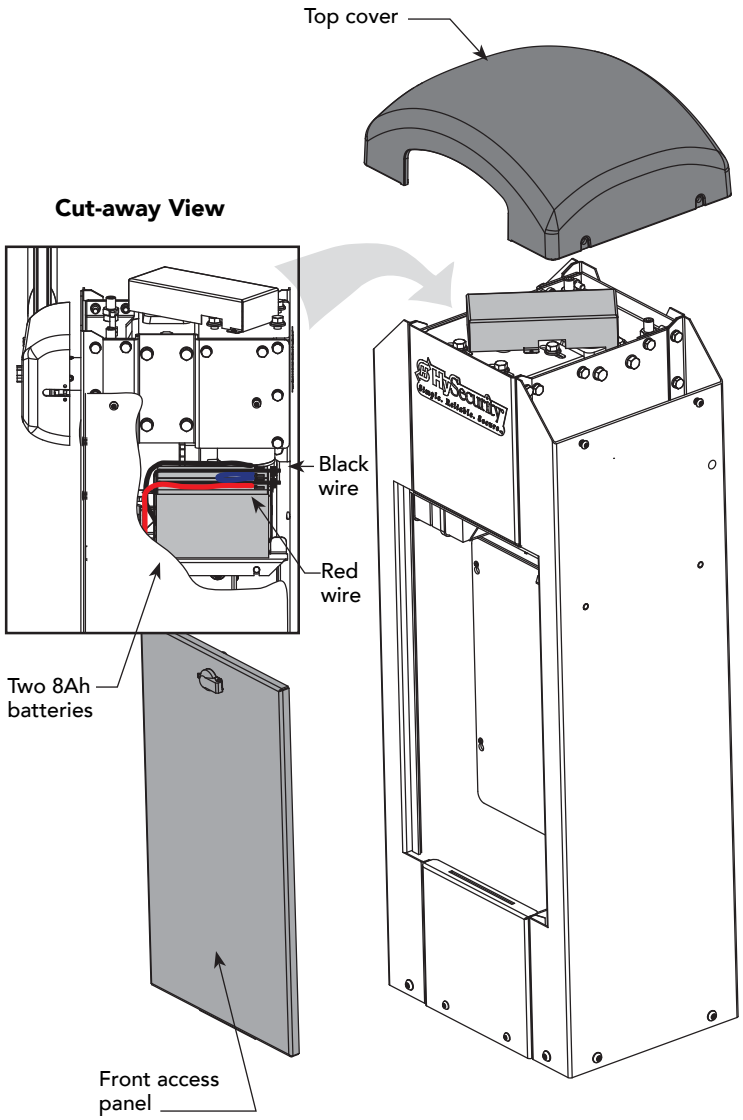

Handing Change

All StrongArmPark DC operators are shipped from the factory in a left handing configuration unless specified otherwise. If you need to change the StrongArmPark DC14 handing at the site, you will need to:

- Release spring tension
- Swap locations of the spring's eyebolt and spacer on the physical stop lever
- Retention the spring

NOTE: If changing the handing on StrongArmPark DC10, follow steps 1 and 10.

1 Remove the front access panel. (Keys come with the operator.)

Use a phillips head screwdriver to remove the plastic cover from the control box.

2 If the drive belt cover is in place, use a phillips head screwdriver to remove two screws that secure it to the motor plate. Set the drive belt cover and fasteners aside.

3 Using a ½-inch socket wrench, remove four fasteners securing the physical stop bracket. (Do NOT break the wire connections.) Hang the bracket from the side of the chassis, as shown.

CAUTION

Wires are attached to the physical stop bracket. Do NOT sever the wires or hang the bracket by the wires.

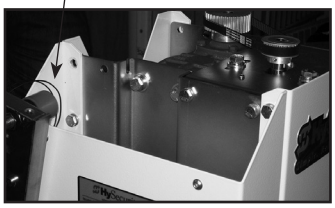

4 Remove the drive belt. Use a 9⁄16-inch socket wrench to loosen (do NOT remove) the 4 bolts securing the motor to the motor plate.

CAUTION

5 Wires are attached to the motor!

- Disconnect the 2 motor wire leads from the wire harness inside the chassis.
- Disconnect the blue connector wire from the Smart DC Controller and pull it out of the control box.

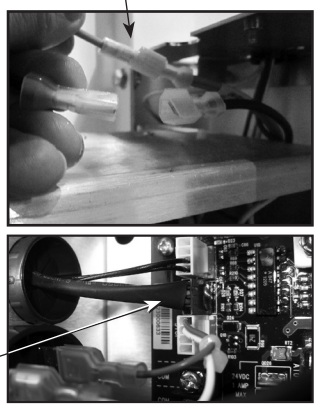

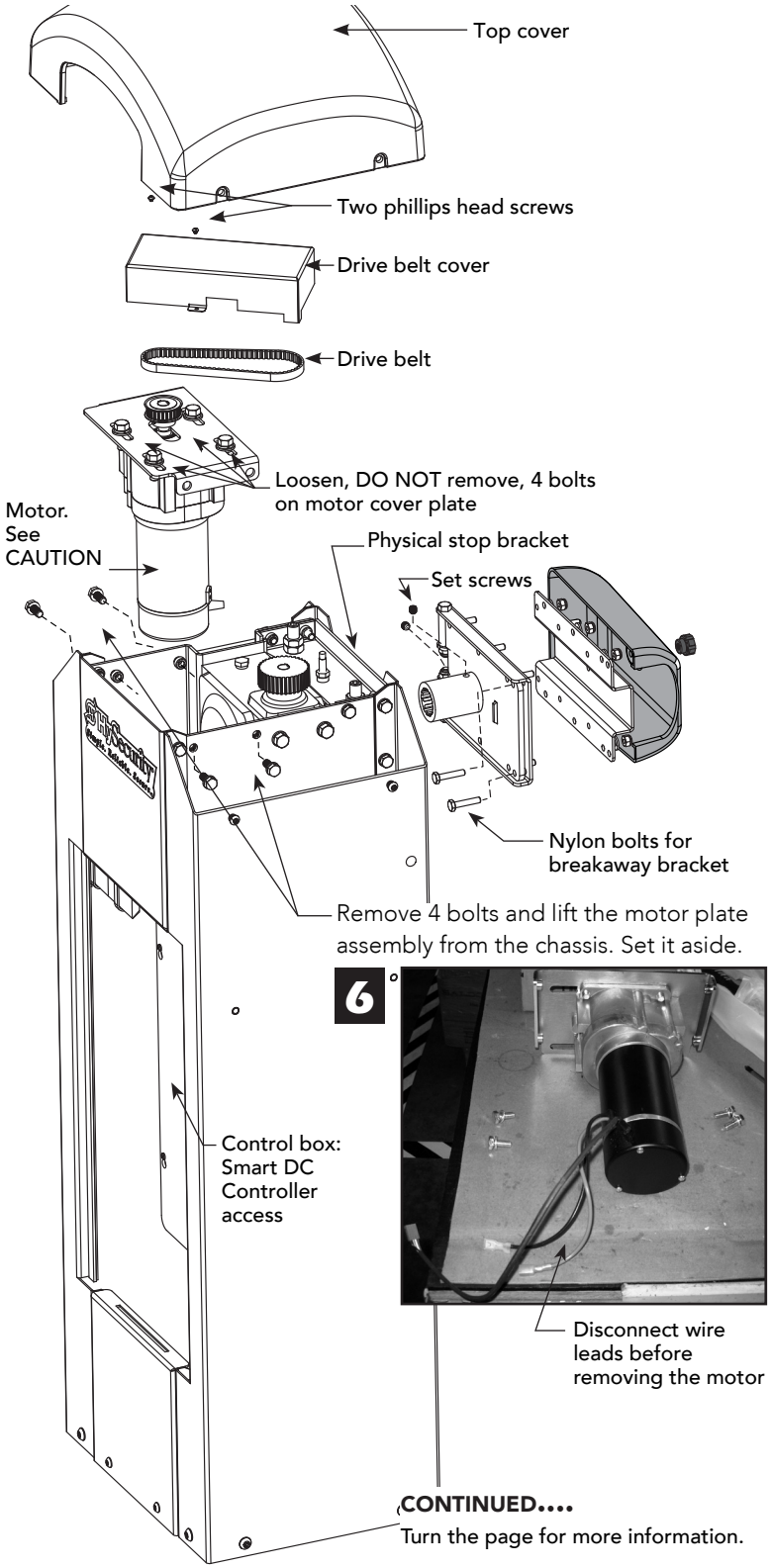

CONTINUED....
Turn the page for more information.

Spring & Physical Stop Lever Assembly

7 **Remove spring tension.** Use a crescent wrench (or 12 point ratchet) to remove the square base nut and washer.

NOTE: You do not need to loosen the nut on the top of the bracket. It helps keep the spring tension at factory settings.

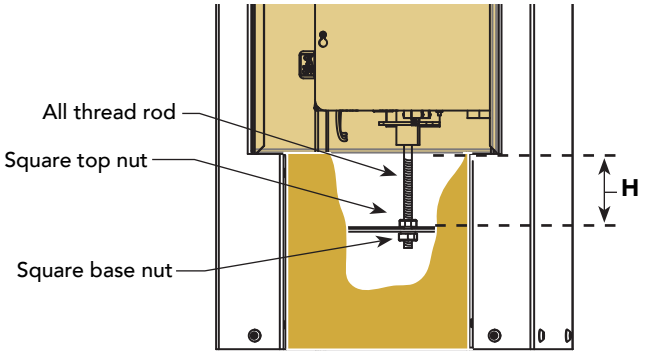

8 **Swap physical stop lever hardware.** Use a ¾-inch deep well socket and box end wrench to remove the fasteners securing the eyebolt. Then, loosen and remove the fasteners from the other the physical stop lever and swap positions on the physical stop levers.

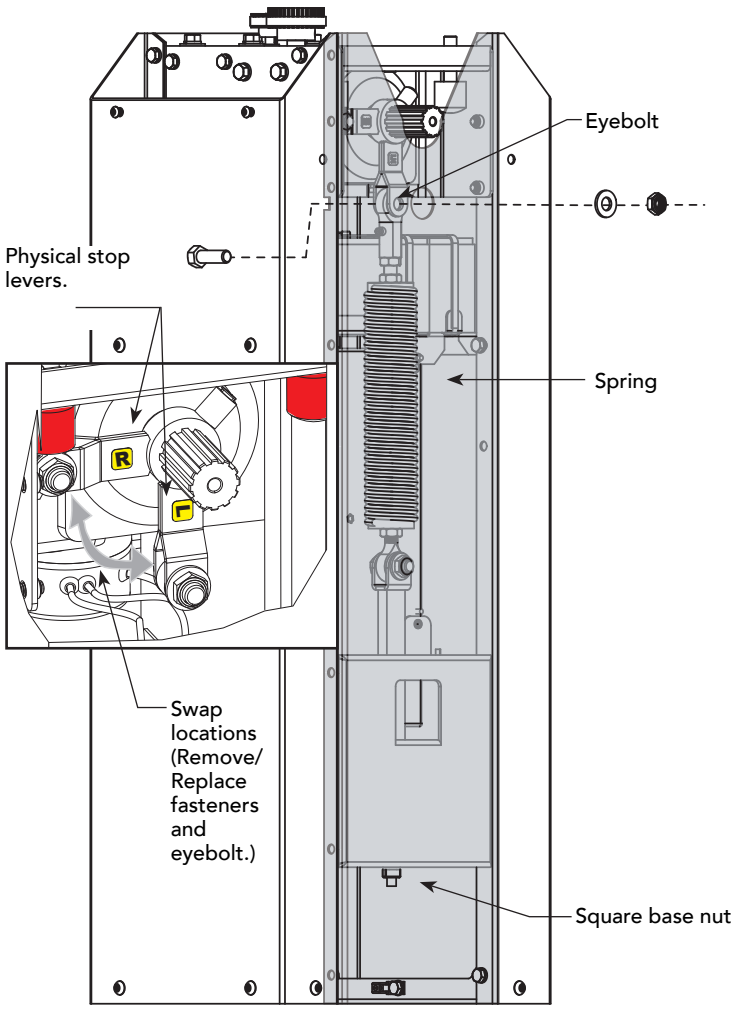

NOTE: For better access, you can rotate the gear box to reposition the physical stop levers.

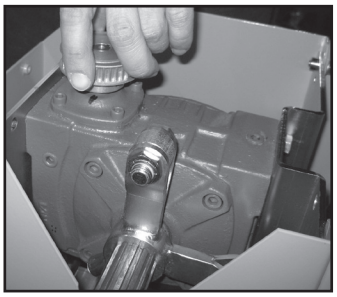

9 Reverse the steps found on page 1.

- Insert the all thread and re-attach the base nut.
- Tighten the two base nuts to the required "H" dimension. See chart.

StrongArmPark DC 14

Arm Length	Spring Setting (H)
11 - 12 ft (3.6 m)	3.5 inches (89 mm)
12 - 13 ft (4 m)	3 inches (76 mm)
13 - 14 ft (4.3 m)	2.5 inches (63 mm)

NOTE: If the arm length is less than 11 ft (3.3 m), disconnect the spring from the physical stop lever.

- Replace the motor and reconnect the 3 wire leads.
- Replace the drive belt and adjust the tension by sliding the motor plate and tightening its 4 bolts.
- Replace the physical stop bracket removed in step 3.
- Replace the drive belt cover.

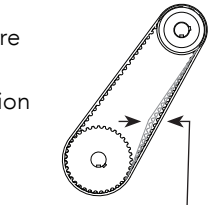

10 ## Set Handing

Turn ON the DC power switch and set the handing using the Smart DC Controller.

- Press MENU twice.
- Press and hold OPEN and RESET, and then release.
- Press NEXT until GATE HANDING appears.
- Press SELECT. SH blinks.
- Press NEXT to set the handing (Left or Right).
- To accept what is being displayed, press SELECT.
- To exit Menu mode, press RESET.
- Turn OFF the DC power switch.
- Install the breakaway bracket by aligning its splines with the gear box.
- Assemble the arm, apply power, and re-learn limits.
- Finish the site installation.

Installation Instructions MX4010

StrongArmPark DC Articulating Arm

Review the illustrations to understand the steps involved in assembling the articulating arm and attaching it to the StrongArmPark DC chassis.

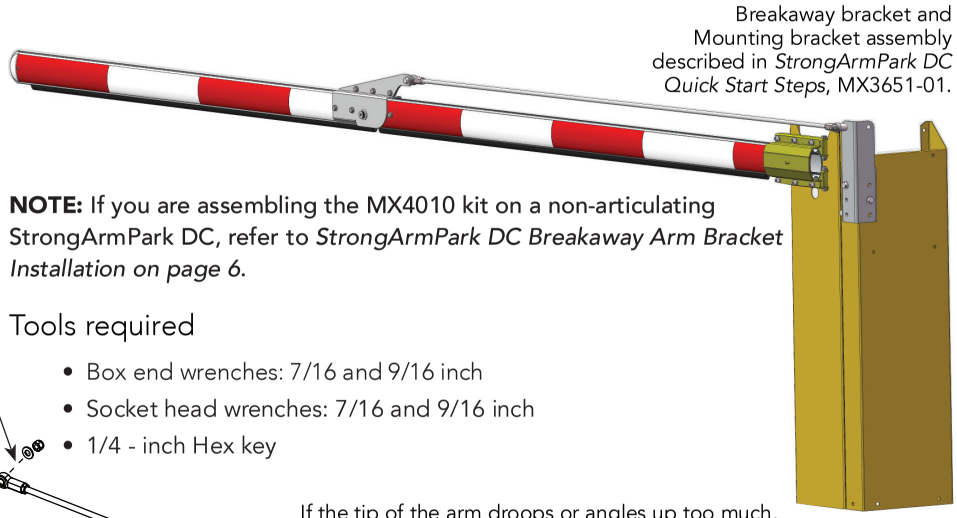

Breakaway bracket and Mounting bracket assembly described in *StrongArmPark DC Quick Start Steps*, MX3651-01.

NOTE: If you are assembling the MX4010 kit on a non-articulating StrongArmPark DC, refer to *StrongArmPark DC Breakaway Arm Bracket Installation on page 6.*

Tools required

- Box end wrenches: 7/16 and 9/16 inch
- Socket head wrenches: 7/16 and 9/16 inch
- 1/4 - inch Hex key

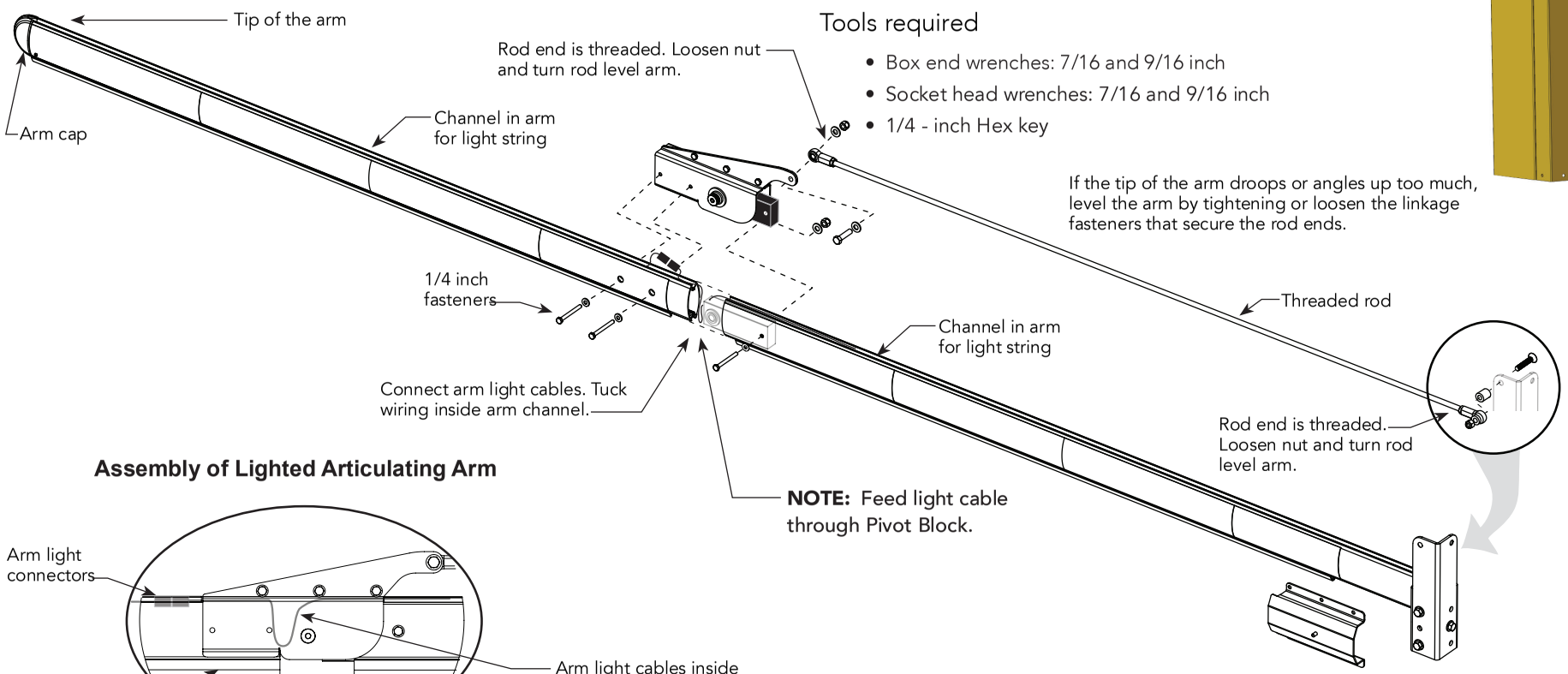

Assembly of Lighted Articulating Arm

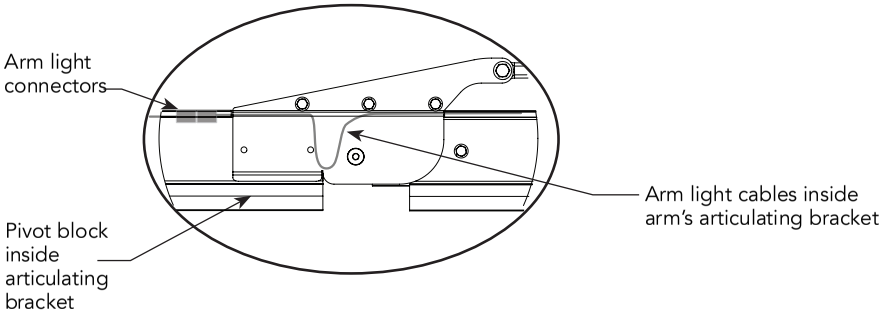

To review an installation video for the standard StrongArmPark DC arm lighting, click on the following link: http://bit.ly/breakawayinstall

Youtube video location: https://youtu.be/AdTWNYcC-NU

Assemble the Pivot Block and Connect Light Strings

1 Feed cable through Pivot Block and the Articulating Arm Bracket.

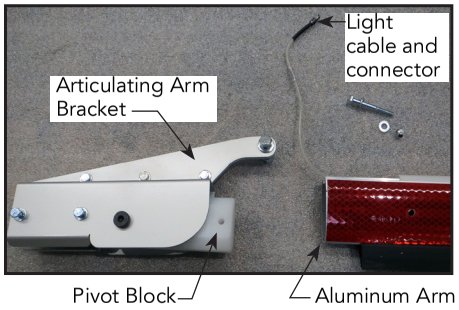

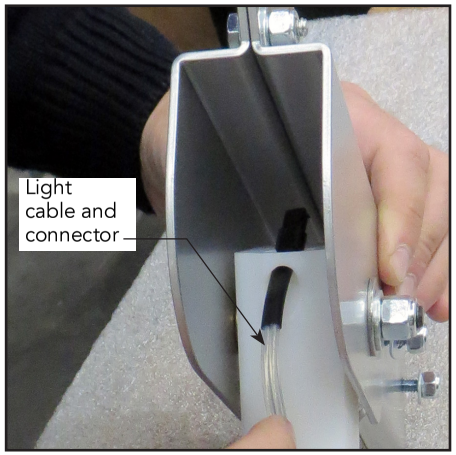

Feeding the cable (LED lighting) through the Pivot Block

2 Insert Pivot Block Assembly into aluminum arm. Guide light cable through Pivot Block hole.

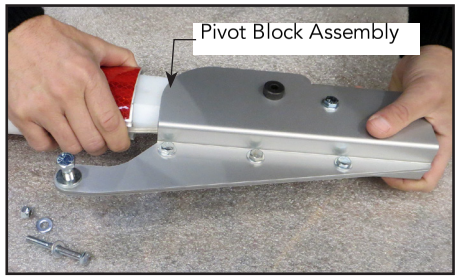

3 Secure Pivot Block with supplied fasteners. Use box-end and socket wrenches. Tighten bolt securely.

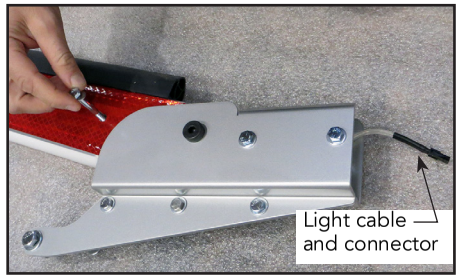

4 Place the aluminum arms next to each other as shown in the photograph.

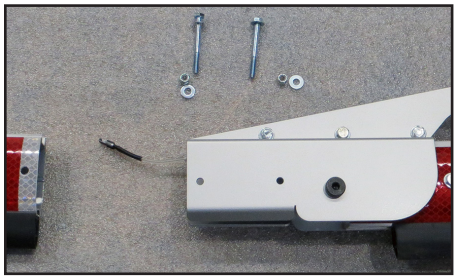

5 Connect the arm lights. Place the connectors inside the arm channel and slide the arm into the Articulating Pivot Bracket.

6 Insert Pivot Block Assembly into aluminum arm. Guide light cable through Pivot Block hole. Create a cable loop. See CAUTION.

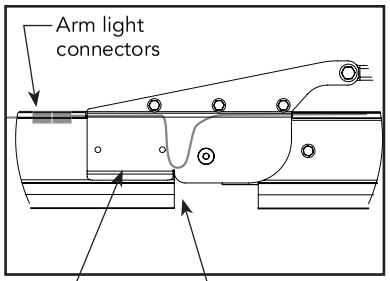

7 Secure the arm to the Articulating Pivot Bracket using the fasteners provided. Tighten securely with socket and box-end wrenches.

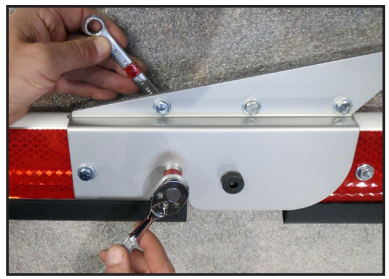

CAUTION

To allow full arm travel and minimal stress on the light connectors, check the cable loop INSIDE the Articulating Pivot Bracket to be sure it moves freely and is not being pinched.

StrongArmPark DC: Articulating Arm Assembly

Follow the exploded views and secure the fasteners as shown.

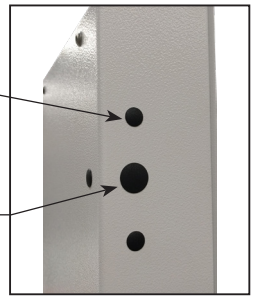

Remove Plugs in Chassis

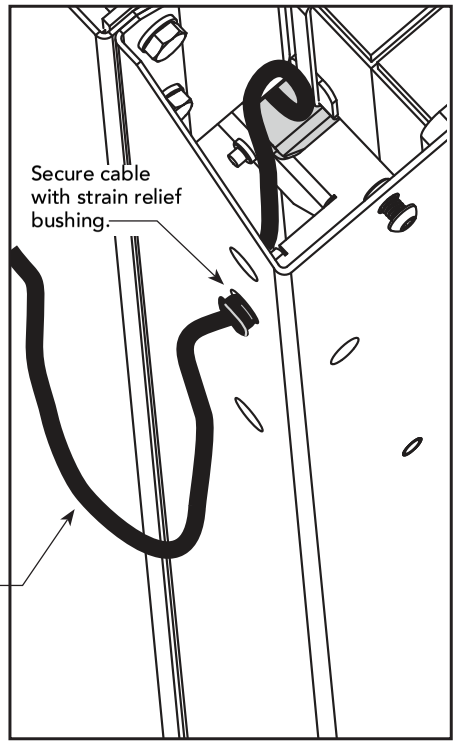

Feed Cable through Chassis

CAUTION

To allow full arm travel, the cable loop on the outside of the chassis must be a minimum 8-inches (20 cm) in length.

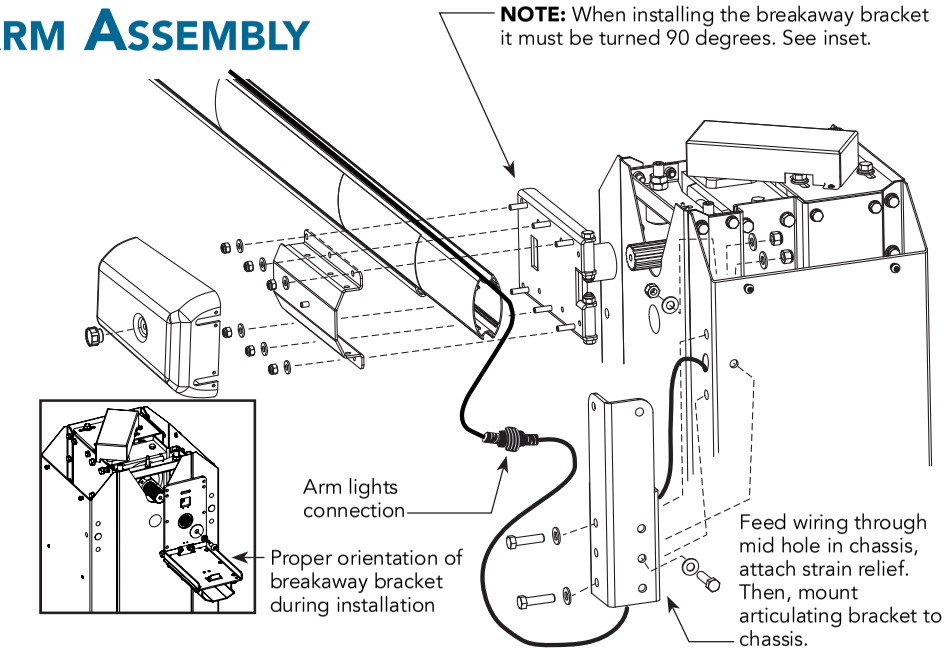

Assemble Arm onto chassis

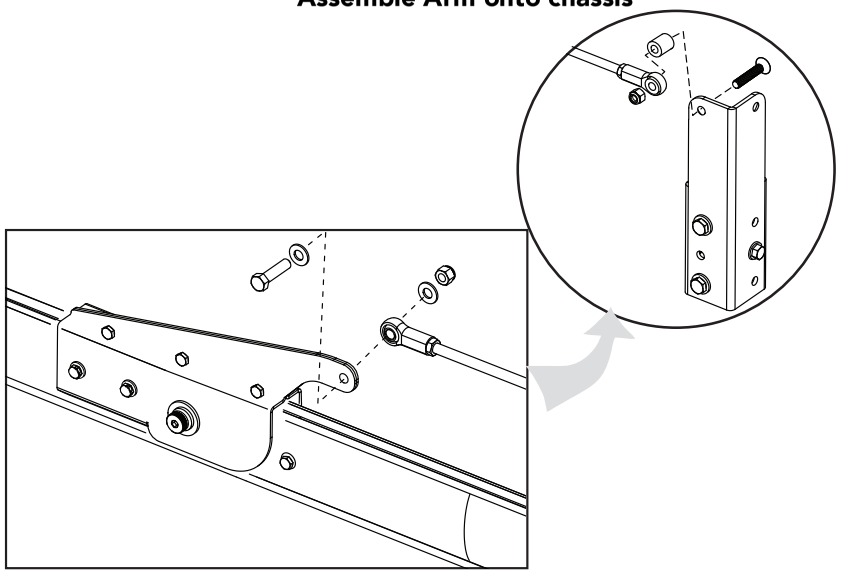

Fasten Articulating Arm Bracket to Rod End and attach assembly to Chassis

StrongArmPark DC: Lighting Connection

1. Make sure both AC and DC power switches are turned OFF.
2. Insert leads of wire harness through the hole in chassis between the two bracket mounts. Feed the cable through the interior of the chassis. Pull enough cable to reach the Smart DC Controller terminals.

   NOTE: Connect wire lead (female quick connect) labeled +24V to 24VDC. Lights will be dim if lead is connected to 12VDC terminal.

3. Attach the end of the wire harness (on the outside of the chassis) to the LED light connector on the arm. The wire harness connector is keyed. Be sure to seat the connectors before threading close. See illustration on previous page.
4. Make sure the harness is secured to the chassis with the strain relief bushing. See illustration on previous page.

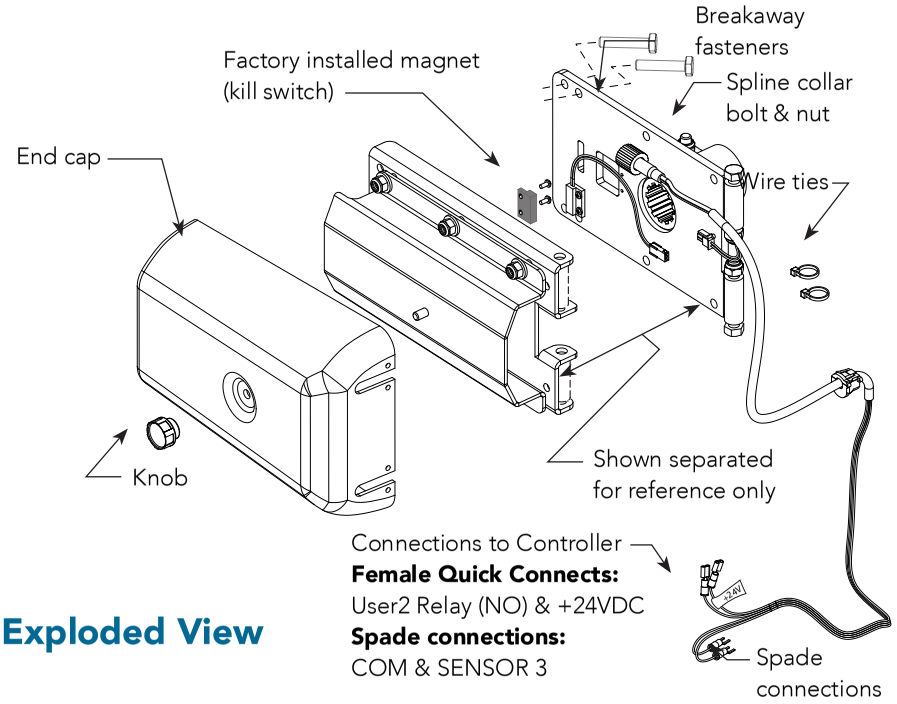

Exploded View

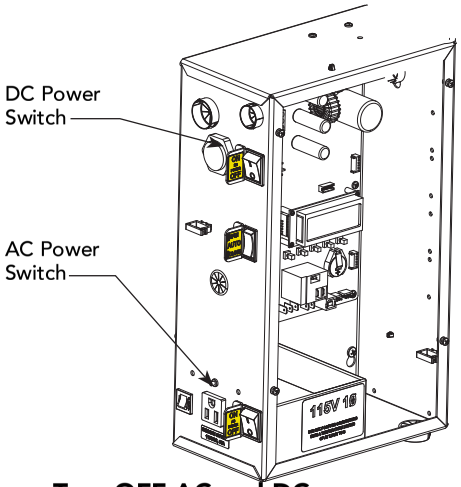

Turn OFF AC and DC power

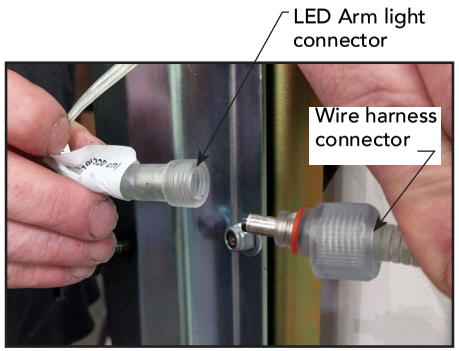

Connect Arm Light Cables

5. Connect female quick connect labeled +24V to the **24VDC** power supply terminal. See wiring illustrations.
6. Connect the second female quick connect to the NO terminal on User Relay 2.

   NOTE: If you are planning to program the proximity sensor in the breakaway bracket assembly, connect one spade connection to COM and the other to SENSOR 3 (Photo Eye Close on BY1 operators).

Smart DC Controller: Menu Mode Navigation Buttons

To access Menu mode	To change menu item appearing in the display	To navigate through the menu item selections
Press the Menu button twice.	Press Select. Two left characters blink.	Press Next or Previous. Continue pressing Next to view all selections.

To choose what item appears on the display	To navigate between menu items
Press Select. Blinking characters become static.	Press Next or Previous. Advance - press Next Previous - press Previous

1. Turn on both AC and DC power switches. Arm will cycle to search for the target home position.
2. When the arm has stopped moving, access the Installer Menu.
3. Set the User Relay 2 logic function to one of the following:
   - R2 "27": LED lights remain on throughout arm travel and turn off when open limit is reached.
   - R2 "28": LED lights flash throughout arm travel and turn off when open limit is reached.

   NOTE: In the event of AC power loss, either selection (27 or 28) turns off the lights which preserves battery life.
4. Set the breakaway switch or press Menu to return to run mode.

RELAY 2: INSTALLER MENU FLOW DIAGRAM

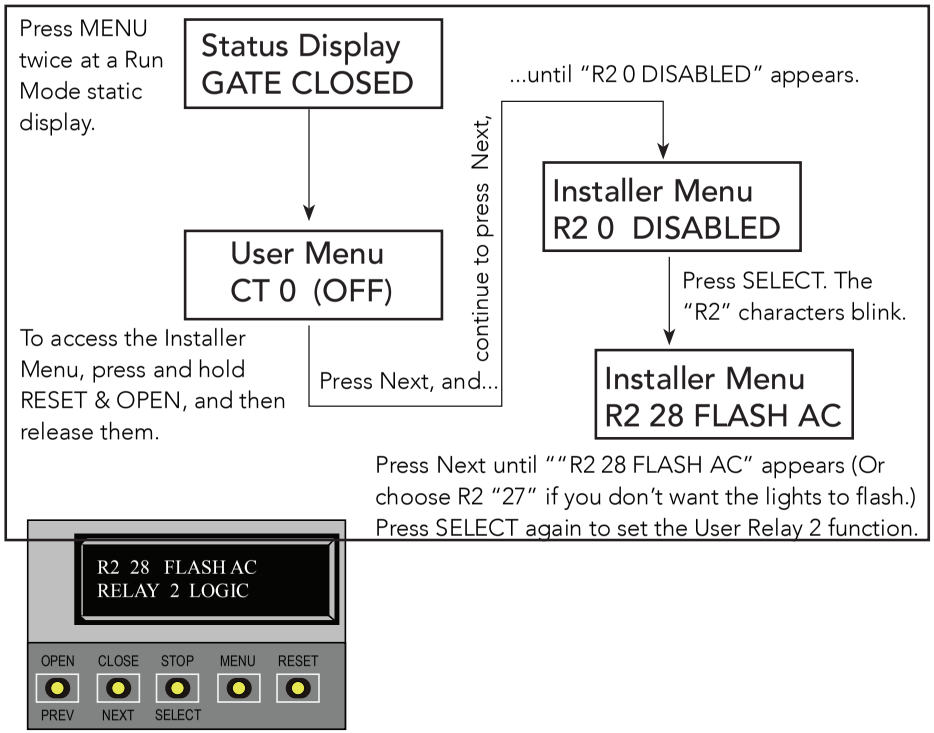

5. To turn on the magnetic proximity switch in the breakaway arm assembly, navigate to BA in the Installer Menu.
6. Select BA and change the menu item to 1.
7. Exit the Installer menu mode by pressing Menu and return to run mode.

   NOTE: For the menu mode navigational buttons, refer to the chart on page 4.

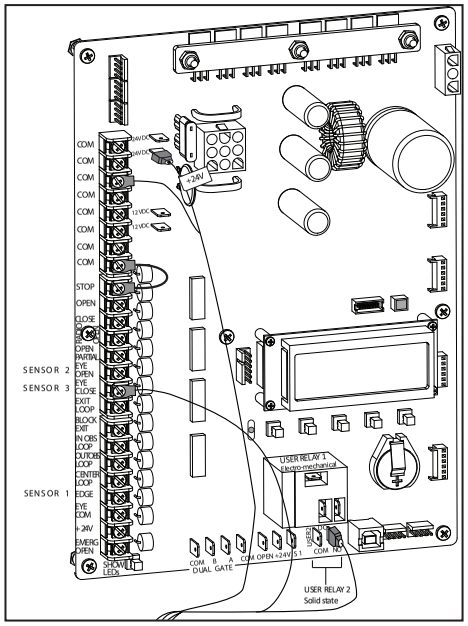

Arm Lights and Breakaway Switch Connections on Smart DC Controller

Retrofit Requires Hole Drilled in Chassis

Tools Required

- Standard drill set
- Electric drill

To retrofit a StrongArmPark DC with MX4122 cable lighting, you will need to drill a 5/8-inch hole in the chassis. The hole provides a means to feed the light cable through the chassis and attach wires for power and programming purposes to the controller.

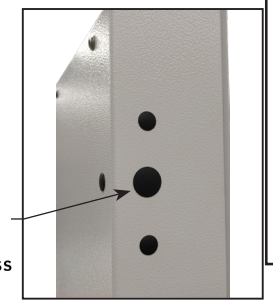

Remove center plug to feed wire harness cable through chassis. If plug doesn't exist, a 5/8-inch access hole may need to be drilled.

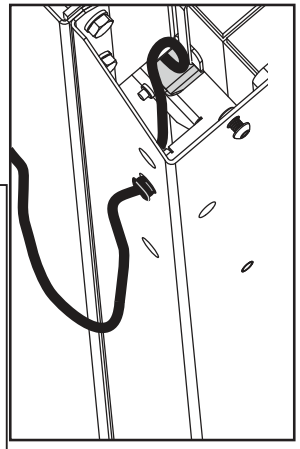

StrongArmPark DC Breakaway Arm Bracket Installation

Tools Required

- Utility knife
- Standard socket set
- Standard hex key set

To review the installation video, scan the QR code with your cell phone or click on the following link: http://bit.ly/breakawayinstall

Youtube video location: https://youtu.be/AdTWNYcC-NU

In a short 8 minutes, the installation video shows you how to:

1. Install the breakaway arm bracket
2. **Connect the magnetic kill switch**
3. **Connect the arm lighting and feed wire through the chassis to the controller (5:50 min)**
4. **Program the controller, Installer Menu setting "BA" Breakaway switch.**

To install the breakaway arm bracket onto the StrongArmPark DC, you can take the steps shown here and view the video for additional step clarification.

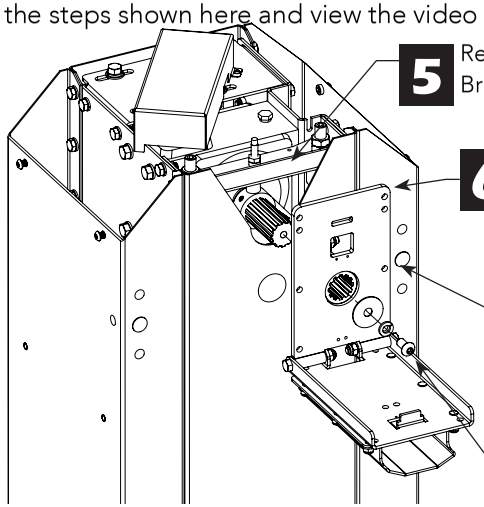

5 Remove Physical Stop Bracket (4 fasteners)

6 Position Breakaway Arm Bracket so the clamp opening faces up.

7 Slide the clamp onto the drive shaft. Align gear teeth as you slide clamp against chassis.
NOTE: You may need to loosen the collar bolt & nut to position the clamp. Re-tighten when spline properly set.

8 Secure clamp to drive shaft using the fasteners provided.

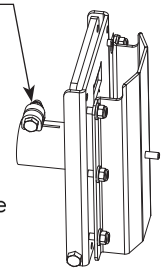

1 Make sure AC and DC power switches are in the OFF position.

2 Connect the red battery wire.
(Refer to step 4 in the Installation Instructions.)

3 Press the DC switch ON and toggle HOLD switch to Hold Open.

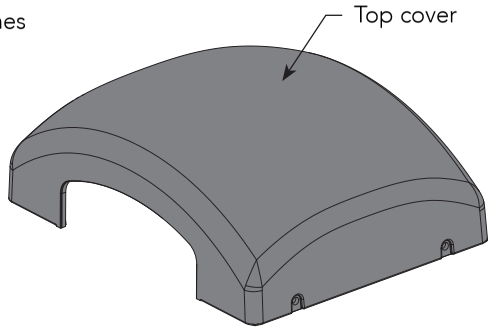

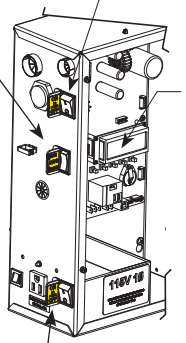

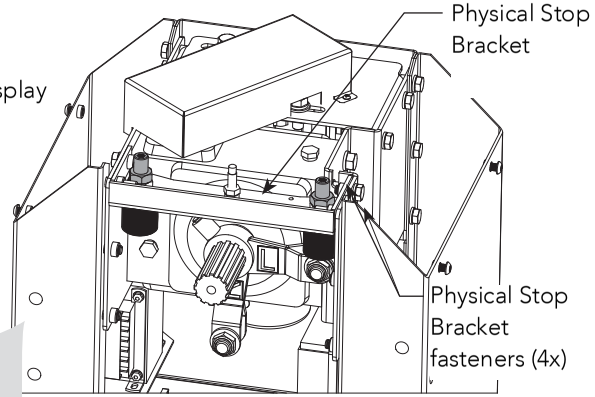

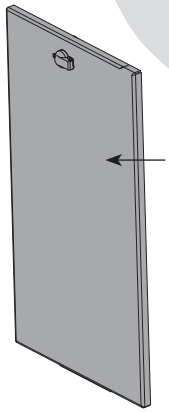

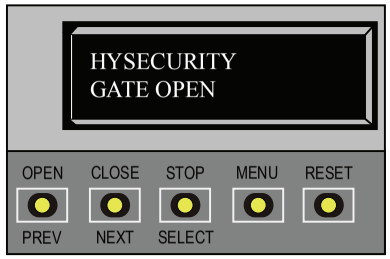

4 After GATE OPEN appears on the display, turn the DC power switch OFF.

NOTE: Follow the video to feed wire harness through chassis, assemble barrier arm, connect lighting and program the gate operator.

HySecurity
a Nice group company

WARRANTY

6705 S 209th St, Ste 101
Kent, WA 98032
800-321-9947
www.hysecurity.com

1. Warranty.

Hy-Security Gate, Inc. ("HySecurity") warrants that at the time of sale each HySecurity-branded product that it sells will, in all material respects, conform to its then applicable specification and will be free from defects in material and manufacture.

The following additional durational warranties apply to HySecurity products, depending on whether (1) the product is purchased through an authorized HySecurity distributor and (2) whether a timely and complete product registration is submitted to HySecurity.

It is therefore important that you register your product with HySecurity, online at www.hysecurity.com/warranty, within the 60-day period described below.

1(a) HySecurity Products Purchased Through Authorized Distributors and Properly Registered

For any gate operator product that is purchased from an authorized HySecurity distributor (this excludes product purchased through internet resellers or any distributor not authorized by HySecurity), if the product registration is completed by the Dealer/Installer or End User within 60 days of the date of purchase, the following warranty terms will apply. HySecurity warrants that the product will remain serviceable for the following periods:

a) Hydraulic industrial gate operator hydraulics, controls, and mechanical components: Five Years or 500,000 gate cycles (whichever occurs first) after the date of installation,
b) Hydraulic wedge operator hydraulics and controls: Five Years or 500,000 cycles (whichever occurs first) after the date of installation. Wedge mechanical components: Two Years after the date of installation,
c) Electromechanical pad-mounted Slide and Swing operators: Five Years or 500,000 cycles (whichever occurs first) after the date of installation, except single family residential usage, where the warranty term shall be Seven Years after the date the product was shipped from HySecurity,
d) Electromechanical linear actuator Swing operators: Two Years after the date of installation,
e) Electromechanical surface mount wedge operator electronics: Two Years or 500,000 gate cycles (whichever occurs first), after the date of installation,
f) Electromechanical Barrier Arm Operators: Two years or 1,000,000 gate cycles (whichever occurs first) after the date of installation,

provided that the preceding Five Year warranty period in (a), (b), and (c) will not extend beyond seven years from the date that the product was shipped from HySecurity, and the Two Year warranty period in (b), (d), (e), and (f) will not extend beyond four years from the date that the product was shipped from HySecurity.

The preceding warranty durations do not apply to the products or components described below (g-j), which have a shorter warranty period:

g) Hydraulic gate operator drive wheels, including XtremeDrive™ wheels and rack: Two Years from date of installation.
h) AC and DC power supplies, chargers, and inverters and HyNet™ Gateway: Two Years from date of installation, except batteries.
i) Batteries: One Year from date of shipment from HySecurity.
j) Components subject to normal wear including, but not limited to, chains, belts, idler wheels, sprockets and fuses: One Year from date of installation.

1(b) HySecurity Products *Not* Purchased Through an Authorized Distributor or Not Properly Registered within 60 Days

For any product that is not purchased from an authorized HySecurity distributor or for which the product registration was not completed by the Dealer/Installer/End User within sixty (60) days of the date of purchase, the following warranty will apply: HySecurity warrants that the product will remain serviceable for the following periods, which begin on the date that the product was shipped from HySecurity:

a) All gate operators: One Year or 100,000 gate cycles, whichever comes first.
b) AC and DC power supplies, chargers, or inverters: One Year.
c) HyNet™ Gateway: One Year.
d) Hydraulic gate operator drive wheels: One Year.

1(c) Replacement Parts

HySecurity warrants that replacement parts (whether new or reconditioned) will remain serviceable for One Year from the date that the part was shipped from HySecurity or the remaining period of the Gate Operator warranty, whichever is longer.

1(d) Limitations and Exclusions Applicable to Each of the Preceding Warranties.

The preceding warranties shall not apply to equipment that has been (1) installed, maintained, or used improperly or contrary to instructions; (2) subjected to negligence, accident, vandalism, or damaged by severe weather, wind, flood, fire, terrorism or war; or (3) damaged through improper operation, maintenance, storage or abnormal or extraordinary use or abuse. Any modification made to products will void the warranty unless the modifications are approved in writing by HySecurity in advance of the change (this exclusion does not apply to normal installation of approved accessories and/or protective devices or sensors). It is the responsibility of the Distributor, Dealer/Installer, or End User to ensure that the software version in the product is maintained to the latest revision level.

The preceding warranties do not extend to accessories when those items carry another manufacturer's name plate and they are not a part of the base model. HySecurity disclaims all warranties for such accessory components, which carry only the original warranty, if any, of their original manufacturer. HySecurity hereby assigns its rights under such manufacturer warranties—to the extent that such rights are assignable—to Buyer.

These warranties extend to HySecurity's Distributors, to the Dealer/Installer, and to the first End User of the product following installation. They do not extend to subsequent purchasers.

2. Exclusion of Other Warranties.

The warranties contained in Section 1 are the exclusive warranties given by HySecurity and supersede any prior, contrary or additional representations, whether oral or written. Any prior or extrinsic representations or agreements are discharged or nullified. HYSECURITY HEREBY DISCLAIMS AND EXCLUDES ALL OTHER WARRANTIES—WHETHER EXPRESS, IMPLIED, OR STATUTORY—INCLUDING ANY **WARRANTY OF MERCHANTABILITY**, ANY **WARRANTY OF FITNESS FOR A PARTICULAR PURPOSE**, ANY LIABILITY FOR INFRINGEMENT, AND ANY WARRANTIES OTHERWISE ARISING FROM COURSE OF DEALING, COURSE OF PERFORMANCE, OR USAGE OF TRADE.

3. Buyer's Exclusive Remedies for Any Nonconformity.

If a HySecurity product fails to conform to the warranties in Section 1, Buyer must notify and order replacement parts from the Distributor through which the product was purchased within a reasonable time and in no event more than thirty (30) days after the discovery of the nonconformity. HySecurity will investigate and, in the event of a breach, will provide, within a reasonable period of time, one of the following: (1) repair or replacement of any nonconforming products or components or (2) refund of the price upon return of the nonconforming items. HySecurity reserves the right to supply used or reconditioned material for all warranty claims. HySecurity will not be considered to be in breach of or default under this Warranty because of any failure to perform due to conditions beyond its reasonable control, including any force majeure. This warranty does not cover any incidental expenses, including fines or penalties, temporary security, labor, shipping, travel time or standby time that are incurred for inspection or replacement of any nonconforming items. As a condition of warranty coverage, warranty claims must be submitted in accordance with the procedures described on the HySecurity form, "RMA Procedures."

THE REMEDY SELECTED BY HYSECURITY IN ACCORDANCE WITH THIS PARAGRAPH SHALL BE THE **EXCLUSIVE AND SOLE REMEDY OF BUYER FOR ANY BREACH OF WARRANTY.**

4. Exclusion of Consequential and Incidental Damages.

HYSECURITY SHALL NOT BE LIABLE FOR ANY INCIDENTAL, SPECIAL, OR CONSEQUENTIAL DAMAGES, WHETHER RESULTING FROM NONDELIVERY OR FROM THE USE, MISUSE, OR INABILITY TO USE THE PRODUCT OR FROM DEFECTS IN THE PRODUCT OR FROM HYSECURITY'S OWN NEGLIGENCE. This exclusion applies regardless of whether such damages are sought for breach of warranty, breach of contract, negligence, or strict liability. This exclusion does not apply to claims for bodily injury or death.

5. Severability.

If any provision of this warranty is found to be invalid or unenforceable, then the remainder shall have full force and effect.

6. Proprietary Rights.

HySecurity retains and reserves all right, title, and interest in the intellectual property rights of its products, including any accompanying proprietary software. No ownership of any intellectual property rights in the products or accompanying software is transferred to Distributor, Dealer/Installer, or End User.

7. Applicable Law.

This warranty will be interpreted, construed, and enforced in all respects in accordance with the laws of the State of Washington, without reference to its choice of law principles. The U.N. Convention on Contracts for the International Sale of Goods will not apply to this warranty.

4 StrongArmPark™ DC Models, AC or Solar

Standard	StrongArmPark DC 10	StrongArmPark DC 14
Solar	StrongArmPark DCS 10	StrongArmPark DCS 14
Arm Length Max.	up to 10 ft (3 m)	10, 12, 14 ft (3, 3.7, 4.3 m)
Field adjustable Open/Close Time	3 speeds: 1.5/2/2.5 seconds	3 speeds: 2.5/3/3.5 seconds
Full Open Angle	Arm full open angle: Adjustable 90° ± 10°	
Handing	Left handing standard. Easy to convert to right handing in field	Left handing standard. Right handing available
Arm Design	Aluminum arm with bumper, lights, HyProtect™ breakaway arm bracket & kill switch	
	Articulating aluminum arm with bumper, HyProtect™ breakaway arm bracket & kill switch; 7 ft clear/8 ft extended (2.1 m/2.4m) 8 ft clear/10 ft extended (2.4 m/3 m) 9 ft clear/10 ft extended (2.7 m/3 m) Lights optional	
	Attachment plates available for 1"x 4" (2.5 x 10 cm) wood and 2.5" (6 cm) square PVC	
Duty Cycle	Continuous	
Drive	Electromechanical	
UPS Battery Backup Cycles*	Two 12V, 8Ah batteries. Operates for thousand plus cycles after AC power loss.* Field configurable to fail open or secure when batteries deplete.	
Operating Voltage	24VDC	
Input Voltage	115VAC, 3A, 60/50Hz or 208-230VAC, 1.5A, 60/50Hz Solar: 24VDC solar panels	
Accessory Power	12VDC and 24VDC 1A each	
Temperature Rating	-13° F to 158° F (-25° C to 70° C)	
Communication	USB, RS-232, RS-485, Ethernet/fiber using optional HyNet™ Gateway accessory	
User Controls	Smart DC Controller with 70+ configurable settings. 32 character LCD display and 5 tact buttons or a PC using S.T.A.R.T. software.	
Relays	One configurable user relay: 250VAC, 10A electromechanical. Optional Hy8Relay™ for 8 additional relay outputs.	
Finish	Zinc plated with powder coating	
ETL Listed (UL 325)	Usage Class I, II, III, IV	
Cycle Tested	2 million cycles	
Warranty	2 years w/product registration	

* The actual number of arm cycles available from battery depends on arm length/weight, battery size, state of charge and health, ambient temperature, accessory power draw and frequency of arm cycles during power outage.

Contact Information:

Visit https://hysecurity.com/technical-support/ for installation manuals, replacement part instructions, part diagrams and more.

Qualified HySecurity distributors are experienced and trained to assist in resolving installation problems. For the name of a qualified distributor near you, call HySecurity at 800-321-9947. *Before contacting your distributor or HySecurity Technical Support, obtain the serial number of your operator.