G-5

INSTALLATION INSTRUCTIONS

AND SAFETY INFORMATION

SINGLE AND DUAL GATE SYSTEMS

UL 325 CLASS I, CLASS II, CLASS III, AND CLASS IV COMPLIANT

Residential and Commercial Vehicular Swing Gate Operator

VIKING WIRELESS

SOLAR EFFICIENT OPERATION

VIKING ACCESS SYSTEMS™ VIKING ACCESS SYSTEMS™ VIKING ACCESS SYSTEMS™

STANDARD FEATURES
AND OPERATOR SPECIFICATIONS

- Manual Release Switch
- Opening up to 135°
- 100% duty cycle
- Built-in power-outage management options
- Up to 400 continuous cycles of operation on backup battery
- Intelligent obstruction detection with adjustable sensitivity
- Adjustable delay for overlapping dual gates
- Hold Open Timer to automatically close the gate
- Modular connectors for easy access control and accessory installation
- Regulated power supply for your external accessories
- LED indicators display gate and operator status for easy troubleshooting
- On-Board LCD Display provides diagnostics, operator status, settings and real-time volt and amp readings
- Built-in motor heater for cold weather applications
- Equipped for 115/230 VAC, 24 VAC/VDC and Solar power supplies

THE VIKING G-5™ SWING GATE OPERATOR

TABLE OF CONTENTS:

IMPORTANT SAFETY INFORMATION 2-9
- Important Safety Instructions 2
- Important Installation Instructions 2-3
- Maintenance 4
- General Safety Precautions 4-5
- UL 325 Gate Operator Classifications 5
- Monitored Entrapment Protection Requirements 6
- Monitored Entrapment Protection Installation 7
- Manual Release 7
- Audible Alarm Reset Installation 8
- Warning Placard Installation 9

SPECIFICATIONS 10

CONTROL BOARD REFERENCES 11

GATE OPERATOR INSTALLATION 12-16
- Plans of Installation 12-13
- Installing the Gate Operator 14
- Post Mount Option 15
- Limit Switch Setup 16

ECU BOX INSTALLATION 17

ELECTRICAL INSTALLATION - STANDARD ECU 18-22
- High Voltage Supply Option 18
- Low Voltage Supply Option 19
- Solar Supply Option 19
- Motor Cable 20-21
- Monitored UL Sensor Connections 22

LIMITS INDICATIONS 23

CONTROL BOARD SETUP 24-27
- Initial Settings 24-25
- Obstruction Detection Sensor (ODS) 26
- Heater, Lock Mode 27

ACCESSORY CONNECTIONS 28-35
- Access Control Connections 28-29
- Radio Receiver 30
- Photocell 31
- Viking Loop Rack 32
- Guidelines for Loop Installations 33
- Magnetic Lock, Lock Solenoid 34
- Barrier Arm Synchronization Option 35

TROUBLESHOOTING 36-41
- LED References 36-37
- LCD Display References 38-40
- Solutions 41

APPENDIX A - SOLAR ECU 42-51

PARTS DIAGRAM/PARTS LIST - OPERATOR 53

PARTS DIAGRAM/PARTS LIST - CONTROL UNIT 54-55

LIMITED WARRANTY 56-57

VIKING ACCESSORIES 58-59

IMPORTANT SAFETY INFORMATION

⚠ **WARNING! Not Following these instructions may cause severe injury or death.**

IMPORTANT SAFETY INSTRUCTIONS

⚠ **WARNING! To reduce the risk of severe injury or death.**

1. READ AND FOLLOW ALL INSTRUCTIONS.
2. Never let children operate or play with gate controls. Keep the remote away from children.
3. Always keep people and objects away from the gate. NO ONE SHOULD CROSS THE PATH OF THE MOVING GATE.
4. Test the gate operator monthly. The gate MUST reverse on contact with a rigid object or stop when an object activates the non-contact sensors. After adjusting the force or the limit of travel, retest the gate operator. Failure to adjust and retest the gate operator properly can increase the risk of severe injury or death.
5. Use the manual release only when the gate is not moving.
6. KEEP GATES PROPERLY MAINTAINED. Read the user's manual. Have a qualified service person make repairs to gate hardware.
7. The entrance is for vehicles only. Pedestrians must use a separate entrance.
8. **Every gate operator installation MUST have secondary protection devices against entrapment, such as edge sensors and photo beams more in particularly in places where the risk of entrapment is more likely to occur.**
9. SAVE THESE INSTRUCTIONS.

IMPORTANT INSTALLATION INSTRUCTIONS

1. Install the gate operator only when:
   a. The operator is appropriate for the construction of the gate and usage Class of the gate (refer to page 5),
   b. All openings of a horizontal slide gate are guarded or screened from the bottom of the gate to a minimum of 6 feet (1.83 m) above the ground to prevent a 2-1/4 inch (57.2 mm) diameter sphere from passing through the openings anywhere in the gate, and in that portion of the adjacent fence that the gate covers in the open position,
   c. ALL EXPOSED PINCH POINTS ARE ELIMINATED OR GUARDED, AND
   d. GUARDING IS SUPPLIED FOR EXPOSED ROLLERS.
2. The operator is intended for installation only on gates used for vehicles. Pedestrians must be supplied with a separate access opening. The pedestrian access opening shall be designed to promote pedestrian usage. Locate the gate such that persons will not come in contact with the vehicular gate during the entire path of travel of the vehicular gate.
3. The gate must be installed in a location so that enough clearance is supplied between the gate and adjacent structures when opening and closing to reduce the risk of entrapment. Swinging gates shall not open into the public access areas.
4. The gate must be properly installed and work freely in both directions prior to the installation of the gate operator. Do not over-tighten the operator clutch or pressure relief valve to compensate for a damaged gate.
5. The gate operator controls must be placed so that the user has full view of the gate area when the gate is moving AND AWAY FROM THE GATE PATH PERIMETER.

⚠ WARNING! Not Following these instructions may cause severe injury or death.

IMPORTANT SAFETY INSTRUCTIONS (Continued)

6. Permanently mounted controls intended for user activation must be located at least 6 ft (1.83 m) away from any moving part of the gate and where the user is prevented from reaching over, under, around or through the gate to operate the controls.
   Exception: Emergency access controls only accessible by authorized personnel (e.g. fire, police, EMS) may be placed at any location in the line-of-sight of the gate.
7. The Stop and/or Reset button must be located in the line-of-sight of the gate. Activation of the reset control shall not cause the operator to start.
8. A minimum of two (2) WARNING SIGNS (placards) shall be installed, in the area of the gate in such a manner that at least one WARNING SIGN is visible by persons located on each side of the gate, for both the secure and unsecure sides of the gate.
9. **For gate operators using non-contact sensors (photoelectric beam or like) in accordance with section 32.1.1 of the UL 325 standard:**
   a. See instructions on the placement of non-contact sensors for each type of application (refer to page 6).
   b. Care shall be exercised to reduce the risk of nuisance tripping, such as when a vehicle, trips the sensor while the gate is still moving, and
   c. One or more non-contact sensors shall be located where the risk of entrapment or obstruction exists, such as the perimeter reachable by a moving gate or barrier (refer to page 6).
   d. For UL compliance: Use Only - Omron: E3K-R10K4-NR-1 // EMX: IRB-RET, IRB-MON // Miller Edge: RG-K-R, PG-K-R100, PG-K-R50, MIM-62
      For ETL compliance: The following can also be used - Viking: 7851053 // Seco-Larm E-931-33PRGQ, E-936-S45RRGQ, E-931-S50RRGQ, E-960-D90GQ // EMX NIR-50-325
10. **For a gate operator utilizing a contact sensor (edge sensor or like) in accordance with section 32.1.1 of the UL 325 standard:**
    a. One or more contact sensors shall be located where the risk of entrapment or obstruction exists, such as a the leading edge, trailing edge, and post mounted both inside and outside of a vehicular horizontal slide gate (refer to page 6).
    b. One or more contact sensors shall be located at the bottom of a vehicular vertical lift gate.
    c. One or more contact sensors shall be located at the pinch point of a vehicular vertical pivot gate.
    d. A hardwired contact sensor shall be located and its wiring arranged so that the communication between the sensor and the gate operator is not subject to mechanical damage.
    e. A wireless contact sensor such as one that transmits radio frequency (RF) signals to the gate operator for entrapment protection functions shall be located where the transmission of the signals are not obstructed or impeded by building structures, natural landscaping or similar obstructions. A wireless contact sensor shall function under the intended end-use conditions.
    f. One or more contact sensors shall be located on the inside and outside leading edge of a swing gate. Additionally, if the bottom edge of a swing gate is greater than 4 inches (101.6 mm) but less than 16 inches (406 mm) above the ground at any point in its arc of travel, one or more contact sensors shall be located on the bottom edge.
    g. One or more contact sensors shall be located at the bottom edge of a vertical barrier (arm).
    h. For UL compliance: Use only - EMX: WEL-200K // Miller Edge: ME117, ME120, ME123, MG020, MGR20, MGS20, RB-G-K10, MIM-62
       For ETL compliance: The following can also be used - ASO: 25.30, 25.45, 95.20 // Miller Edge: ME110

IMPORTANT SAFETY INFORMATION

⚠ **WARNING! Not Following these instructions may cause severe injury or death.**

MAINTENANCE

Remove the Power Harness from the Control Board. (refer to page 11)

- Clean and lubricate the turning pins and gate hinges using the recommended lubricant.
- Check that all mounting hardware of the gate operator is properly tightened.
- Ensure that the gate moves freely.
- Check for corroded parts and replace if necessary.
- Check the battery for the following:
  - Battery connections must be free of corrosion.
  - Battery voltage must be 26VDC (fully charged battery).

Reconnect the Power Harness for the Control Board. (refer to page 11)

- Check and confirm the proper operation of all safety devices (photoelectric eye, edge sensors or like).
- Check and confirm the operation of all installed accessories.
- Check and confirm the operation of all special features such as the Intelligent Obstruction Sensor and Hold Open Timer. (refer to pages 24-26)
- Check and confirm the operation of the manual release. (refer to page 7)
- Verify the functionally of the battery backup, or power failure option, by turning off the main power source (115VAC or 230VAC). **DO NOT FORGET TO TURN ON THE MAIN POWER SOURCE AFTER VERIFICATION.**

GENERAL SAFETY PRECAUTIONS

The following precautions are an integral and essential part of the product and must be supplied to the user. Read them carefully as they contain important indications for the safe installation, use and maintenance.

- These instruction must be kept and forwarded to all possible future users of the system.
- This product must be used only for that which it has been expressly designed.
- Any other use is to be considered improper and therefore dangerous.
- The manufacturer cannot be held responsible for possible damage caused by improper, erroneous or unreasonable use.
- Avoid operating in the proximity of the hinges or moving mechanical parts.
- Do not enter the path of the moving gate while in motion.
- Do not obstruct the motion of the gate as this may cause a situation of danger.
- Do not allow children to play or stay within the path of the moving gate.
- Keep remote control or any other control devices out of the reach of children, in order to avoid possible involuntary activation of the gate operator.
- In case of break down or malfunctioning of the product, disconnect from the main power source. Do not attempt to repair or intervene directly, contact only qualified personnel for repair.
- Failure to comply with the above may create a situation of danger.
- All cleaning, maintenance or repair work must be carried out by qualified personnel.
- In order to guarantee that the system works efficiently and correctly it is important to have the manufacturer's instructions on maintenance of the gate and operator carried out by qualified personnel.
- In particular, regular checks are recommended in order to verify that the safety devices are operating correctly.

All installation, maintenance and repair work must be documented and made available to the user.

⚠ **WARNING! Not Following these instructions may cause severe injury or death.**

GENERAL SAFETY PRECAUTIONS (Continued)

a. Use only the following type and size battery(ies): Yuasa NP7-12 or VIKING DUBA12
b. Do not dispose of the battery(ies) in fire. The cells may explode. Check with local codes for possible disposal instructions.
c. Do not open or mutilate the battery(ies). Released electrolyte is corrosive and may cause damage to the eyes or skin. It may be toxic if swallowed.
d. Exercise care in handling batteries in order not to short the battery with conducting materials such as rings, bracelets and keys.
e. Change the battery(ies) provided with or identified for use with this product only in accordance with the instructions and limitations specified in this manual.
f. Observe proper polarity orientation between the battery(ies) and charging circuit.
g. Do not mix batteries of different sizes or from different manufactures in this product (applies to products employing more than one user replaceable secondary battery).
h. A battery-operated product employing a secondary battery supply intended to be charged within the product shall contain specific instructions concerning the proper method of charging.

UL 325 Gate Operator Classifications

GLOSSARY

RESIDENTIAL VEHICULAR GATE OPERATOR

CLASS I - A vehicular gate operator (or system) intended for use in garages or parking areas associated with a residence of one-to four single families.

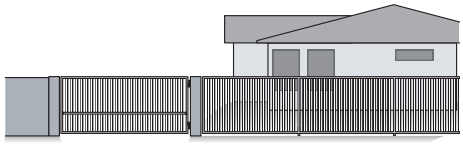

COMMERCIAL/GENERAL ACCESS VEHICULAR GATE OPERATOR

CLASS II – A vehicular gate operator (or system) intended for use in a commercial location or building such as a multi-family housing unit (five or more single family units), hotel, garages, retail store, or other building servicing the general public.

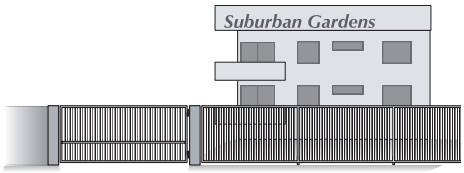

INDUSTRIAL/LIMITED ACCESS VEHICULAR GATE OPERATOR

CLASS III – A vehicular gate operator (or system) intended for use in an industrial location or building such as a factory or loading dock area or other locations not accessible by or intended to service the general public.

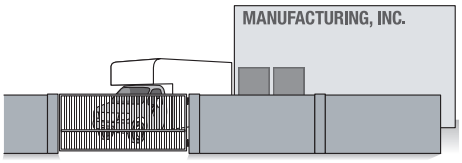

RESTRICTED ACCESS VEHICULAR GATE OPERATOR

CLASS IV – A vehicular gate operator (or system) intended for use in a guarded industrial location or building such as an airport security area or other restricted access locations not servicing the general public, in which unauthorized access is prevented via supervision by security personnel.

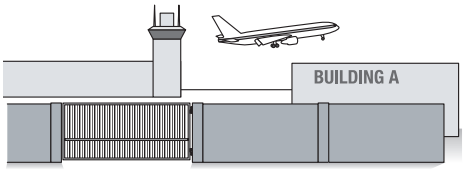

Install the gate operator only when:
The operator is appropriate for the construction of the gate and the Usage Class of the gate.

IMPORTANT SAFETY INFORMATION

⚠ WARNING! Not Following these instructions may cause severe injury or death.

Monitored Entrapment Protection Requirements

IMPORTANT: MONITORED PROTECTION MUST BE INSTALLED

- **REQUIRED BY UL 325, an approved MONITORED entrapment protection sensor is REQUIRED to be installed in all areas accessible to potential entrapment and pinch points.**
- For a horizontal swing gate operator, at least one Monitored External Entrapment Sensor is required in each direction of travel. Except, if there is no entrapment zone in one direction of travel, it is not required to have a Monitored Entrapment sensor for that direction of travel.

  ⚠ If there is a possible entrapment zone in the open direction, an external sensor MUST be connected to the "UL" input or the installation will not comply with UL 325.

  ⚠ An external sensor connected to the "Re-Open" input terminal will protect against entrapment ONLY in the closing direction.
- The installed sensor MUST be **"10K Resistor Based".**
- You may connect up to FOUR monitored sensors, wired in parallel, to either the "UL" and/or "Re-Open" terminals, for a total of 8 monitored sensors.
- **Failure to install the required monitored entrapment protection sensor(s) may render the gate operator INOPERABLE. The gate can be moved manually. Refer to page 7.**
- Consult the installation manual of the sensor for detailed information about the usage, installation and maintenance.
- Use only UL and/or ETL Recognized Edge Sensors and Photoelectric Sensors. Refer to pg 3.

SWING GATE ENTRAPMENT ZONE – Locations between a moving gate or moving, exposed operator components and a counter opposing edge or surface where entrapment is possible up to 1.8 m (6 ft) above grade. Such locations occur if during any point in travel:

a. The gap between the bottom of a moving gate and the ground is greater than 101.6 mm (4 in) and less than 406 mm (16 in); or

b. The distance between the center line of the pivot and the end of the wall, pillar, or column to which it is mounted when in the open or closed position exceeds 101.6 mm (4 in). Any other gap between a moving gate and fixed counter opposing edges or surfaces or other fixed objects is less than 406 mm (16 in) (examples are walls, curbs, berms or other immovable objects).

Photoelectric Sensor (non-contact sensor)

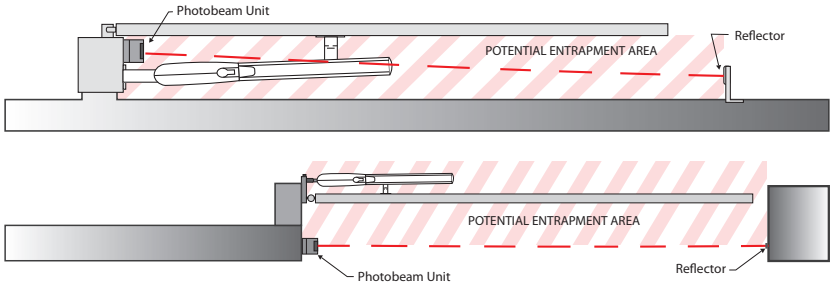

Edge Sensor (contact sensor)

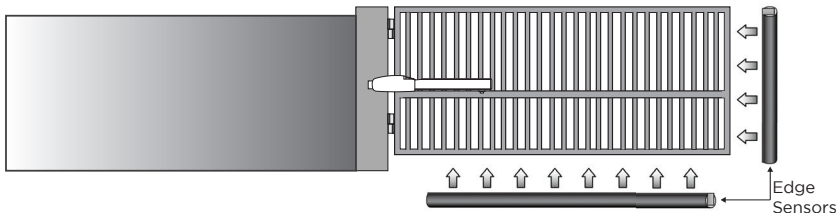

⚠ WARNING! Not Following these instructions may cause severe injury or death.

Monitored Entrapment Protection Installation

⚠ **IMPORTANT:** A minimum of one Monitored External Entrapment Sensor is required to be connected to the UL terminal OR the Re-Open terminal. If there is a possible entrapment zone in the open direction, an external sensor MUST be wired to the "UL" input or the installation will not comply with UL 325.

"UL" Protects against entrapment in both the opening and closing directions. Input will reverse the gate momentarily in the opposite direction it was traveling. Refer to page 22.

"Re-Open" Protects against entrapment in the closing direction ONLY. Input will reverse the gate all the way to the Open Limit. Refer to page 22.

STEP 1: Connect the monitored entrapment protection sensor(s) to the Viking Control Board.

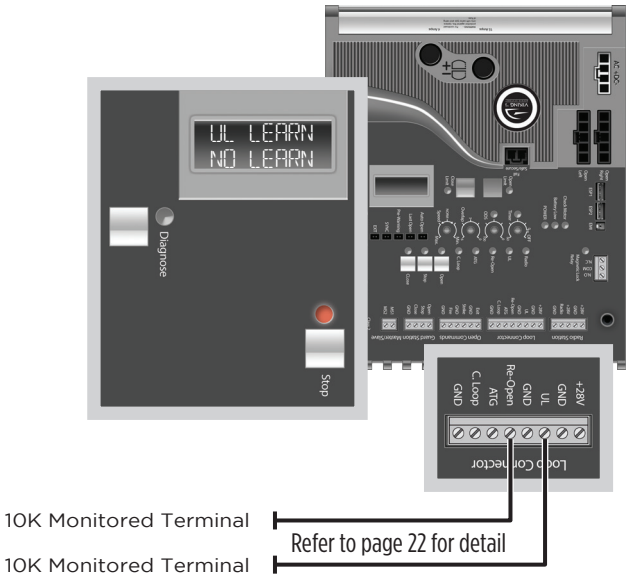

STEP 2:

Execute the Learn Process:

- Press and release the "Diagnose" button until you see UL LEARN NO LEARN on the LCD Display.
- Press and hold the "Stop" button.
- Toggle the "Diagnose" button once.
- The number of Monitored sensors connected to the "UL" or "Re-Open" terminals will now be displayed.

  EXAMPLE: UL LEARN
  UL2 RO1

UL SENSOR ERRORS:

If a problem occurs with one of the monitored entrapment sensors, the "Stop" LED will illuminate and an ERR message will be displayed, indicating which input terminal(s) the sensor is connected to.

TERMINAL:	"UL"	"Re-Open"	"UL" & "Re-Open"
ERROR MESSAGE:	ERR SENS UL	ERR SENS RO	ERR SENS UL RO

Manual Release

When manual operation is required:

1. Unlock and remove the Top Cover with the Key or optional Thumb Screw.
2. Press the Manual Release Switch to the "RELEASE" Position.

The gate can now be moved manually. To resume normal operation, press the switch to the "ENGAGE" position.

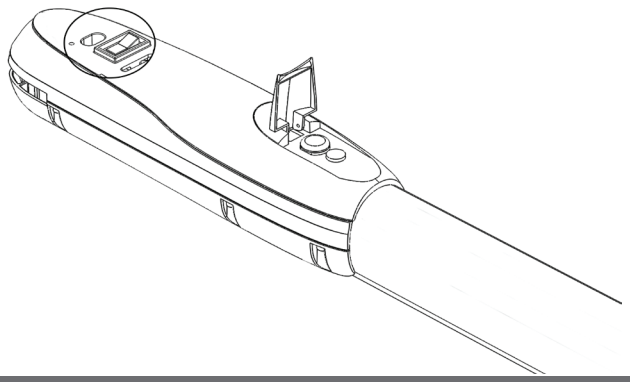

IMPORTANT SAFETY INFORMATION

⚠ **WARNING! Not Following these instructions may cause severe injury or death.**

Audible Alarm Reset Switch Installation

Manual Reset for the Audible Alarm

- UL 325 standard requires an audible alarm to sound after two consecutive events detected by the inherent entrapment protection of the gate operator (obstruction sensor).
- The audible alarm will continue to sound for 5 minutes or until a stop command is actuated.
- The Stop command can be actuated in three different forms:
  1. Using the Built in Stop switch on the Control Board; or
  2. Using an External Stop button within the sight of the gate, away from moving parts of the gate and out of reach of children.
     a. Controls intended for user activation must be located at least six feet (6’) away from any moving part of the gate and where the user is prevented from reaching over, under, around, or through the gate to operate the controls. Outdoor or easily accessible controls shall have a security feature to prevent unauthorized use.
     b. The Stop and/or Reset button must be located in the line-of-sight of the gate. Activation of the reset control shall not cause the operator to start.
  3. Using the Reset Button on the Electronic Control Unit that is externally accessible on the left side of the cabinet.

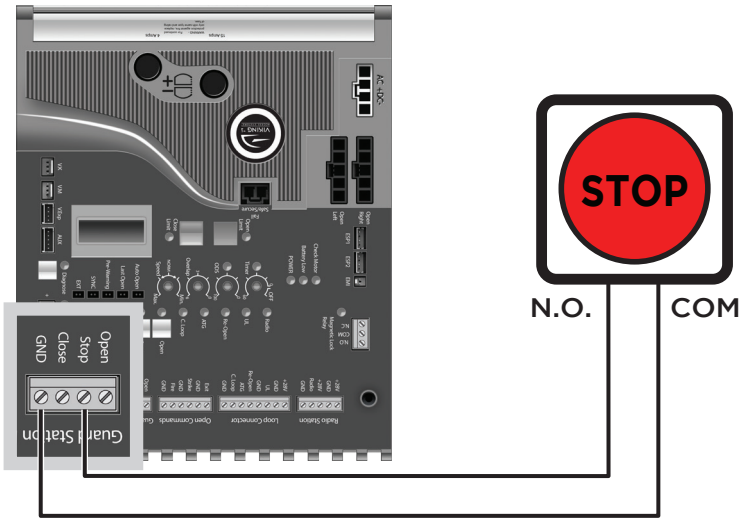

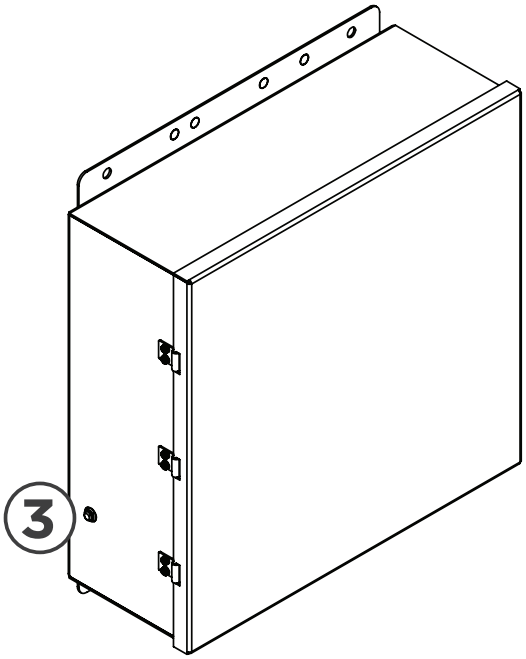

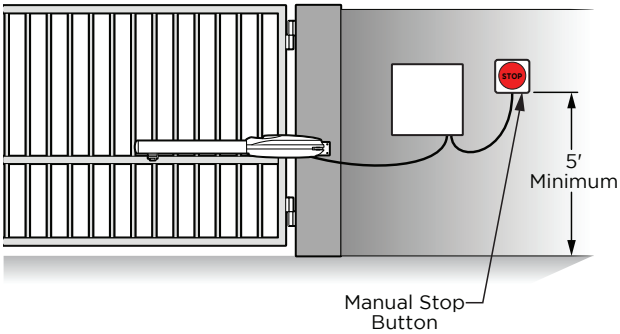

IMPORTANT SAFETY INFORMATION

⚠ WARNING! Not Following these instructions may cause severe injury or death.

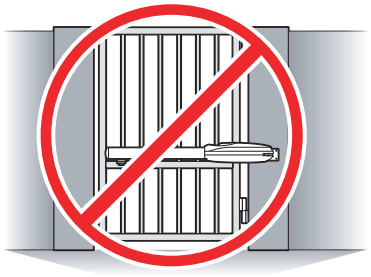

DO NOT allow pedestrian use of this gate

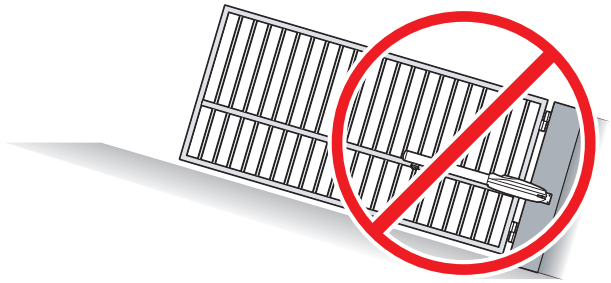

DO NOT install the gate operator to lift gates

Locate Control Buttons

- Within sight of the gate,
- At a minimum height of 5 feet so small children are not able to reach it; and
- At least 6 feet away from all moving parts of the gate.

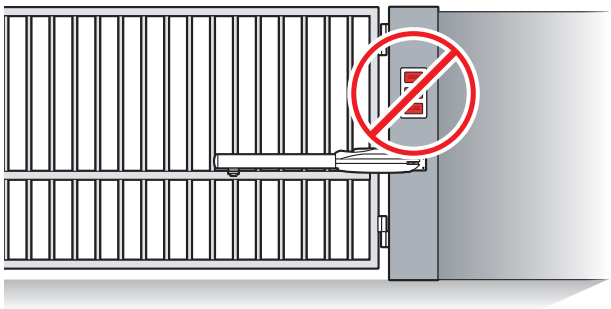

Warning Placard Installation

A minimum of two (2) WARNING SIGNS (placards) shall be installed, in the area of the gate in such a manner that at least one WARNING SIGN is visible by persons located on each side of the gate, for both the secure and unsecure sides of the gate.

SPECIFICATIONS

SPECIFICATIONS	
Max Gate Length	18 Feet *refer to chart
Max Gate Weight	2000 lbs *refer to chart
UL 325 Classification	Class I, II, III, IV *refer to page 5
Duty Cycle	100%
Operating Voltage	24VDC
Main Power Source	120VAC / 240VAC Single Phase
Main Power Current	1.5A / 1.0A (each motor)
Main Power Frequency	50Hz / 60Hz
Main Power Fuse	4.0A Timed
Alternative Power	24VAC/VDC (60VA) or Solar
Accessory Power	24VDC (750mA)
Power Consumption - Idle	70mA Single / 125mA Dual
Motor Current Draw - Typical	3.0A
Operating Temperature	-20°F (-28°C) to 160°F (71°C)
Opening Angle	135°

MOTOR CABLE LENGTH/GAUGE	
40 Feet	16 AWG
60 Feet	14 AWG
80 Feet	12 AWG
120 Feet	10 AWG
More than 120 Feet	Not Recommended

⚠ **IMPORTANT:** Cable shall be shielded with drain wire. Connect drain wire to chassis ground of both the Operator and the ECU.

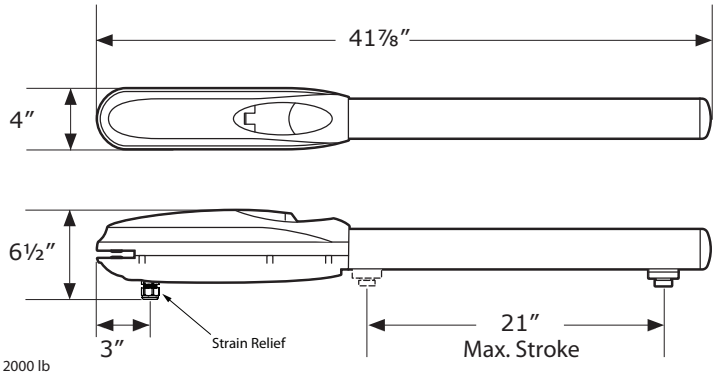

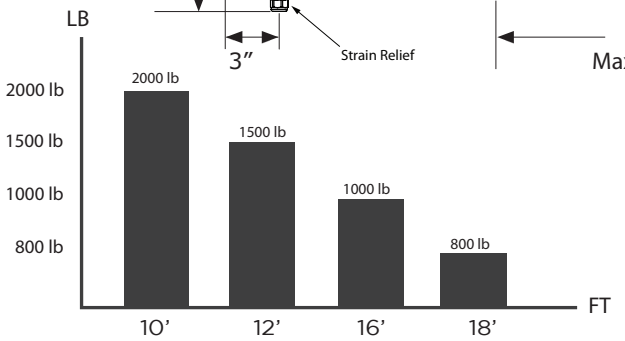

Gate Weight/Length Relationship

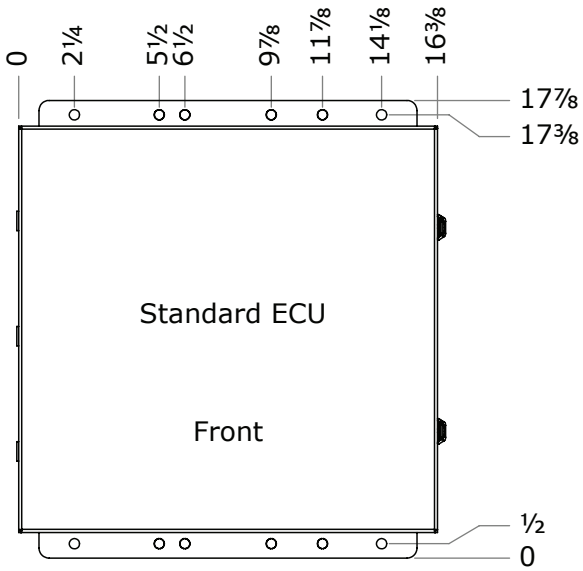

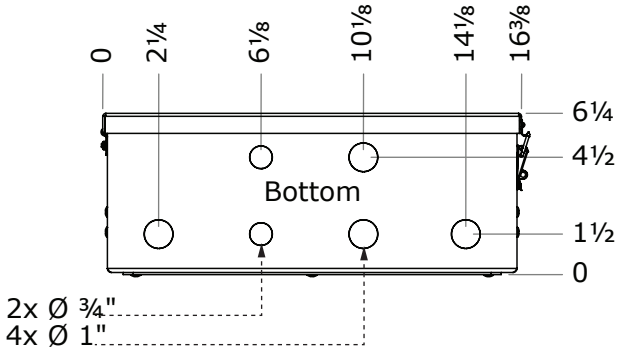

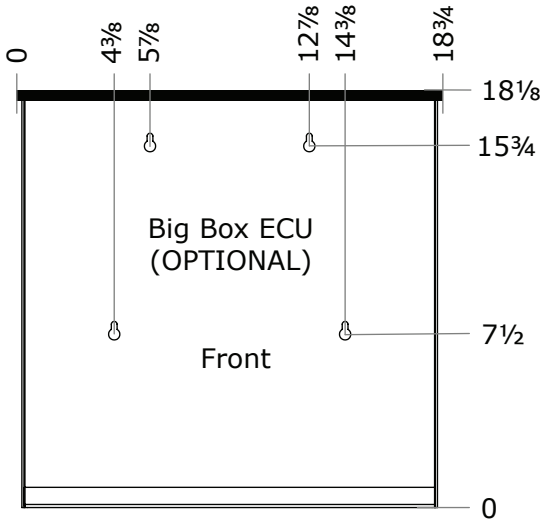

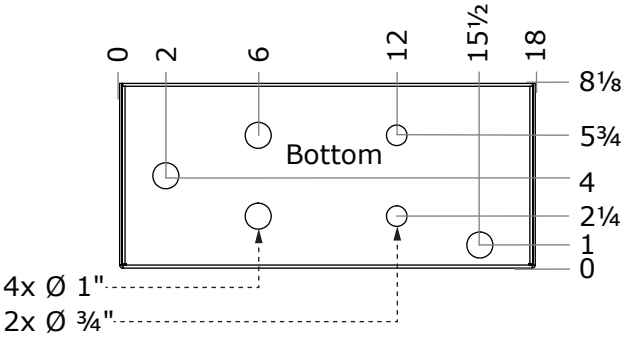

CONTROL BOARD REFERENCES

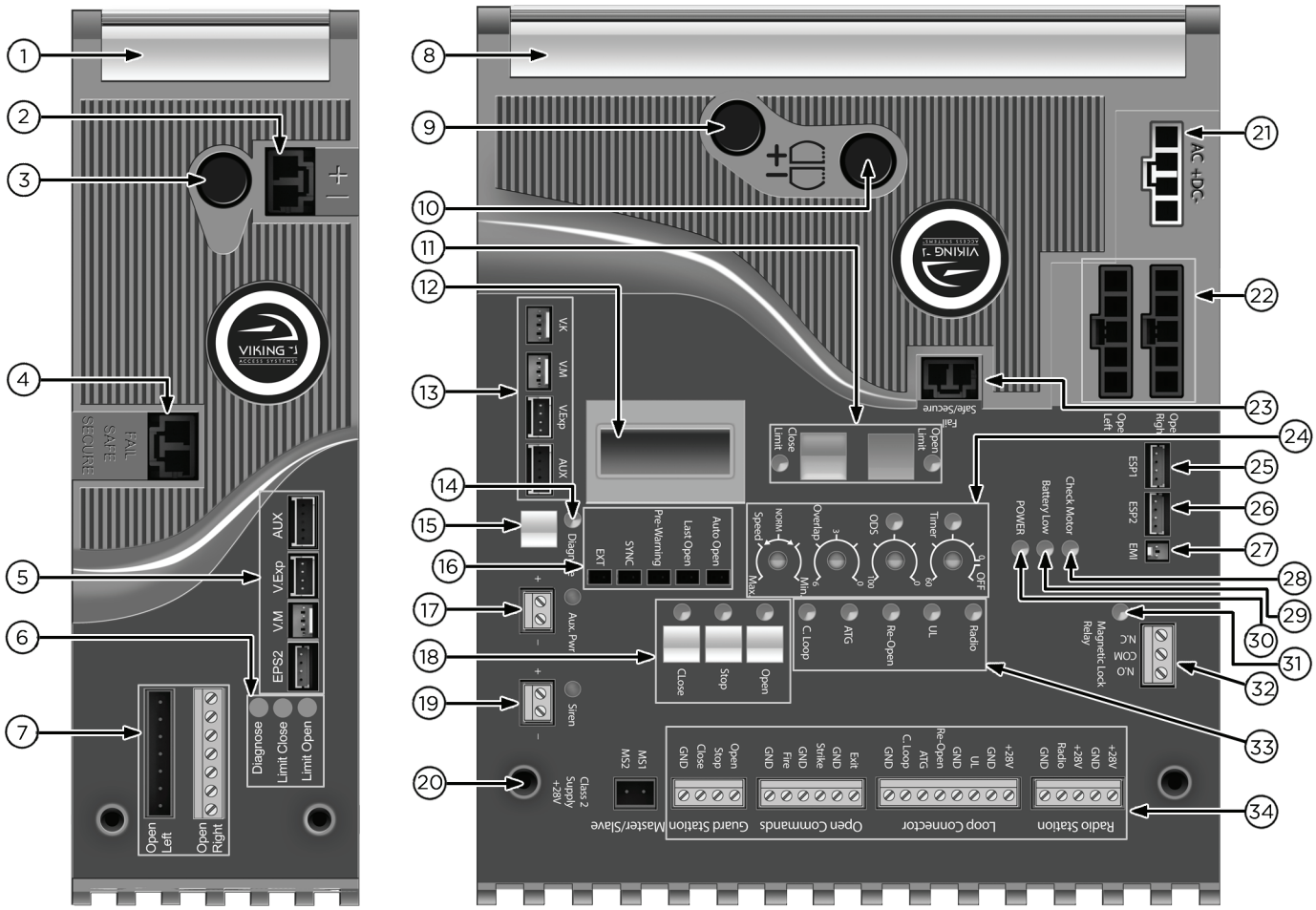

1. HEAT SINK - SECONDARY MODULE
   secures the Control Board and dissipates heat.

2. SECONDARY MODULE POWER HARNESS CONNECTOR provides power to the Secondary Module. pg 21

3. FUSE HOLDER - 15 AMP
   for the Secondary motor circuit.

4. "FAIL SAFE/SECURE" SECONDARY MODULE
   power failure option. pg 25

5. M/S COMM CABLE CONNECTION - SECONDARY MODULE Primary/Secondary (dual) gate applications. pg 21

6. STATUS LEDs - SECONDARY MODULE
   provides diagnostic information.

7. SECONDARY MOTOR CONNECTION
   provides power to the Secondary motor. pg 21

8. HEAT SINK - PRIMARY
   secures the Control Board and dissipates heat.

9. FUSE HOLDER - 4 AMP
   for the charging circuit.

10. FUSE HOLDER - 15 AMP
    for the Primary motor circuit.

11. LIMIT SETUP BUTTONS
    available for future developments.

12. LCD DIAGNOSTICS DISPLAY
    provides error messages, diagnostics settings and operator status information. pg 38-40

13. M/S COMM CABLE CONNECTION - PRIMARY
    Primary/Secondary (dual) gate applications. pg 21

14. "DIAGNOSE" LED
    informs that errors have been detected and available on LCD Display. pg 40

15. "DIAGNOSE" Button
    allows you to navigate through the Diagnostics LCD Display. pg 38-40

16. FEATURE ACTIVATION PIN HEADERS
    activate features by placing a jumper onto the pin headers. pg 25

17. "AUX. PWR" Terminal Block
    used for solar applications & gate position trigger. pg 19, 25

18. ON-BOARD 3 BUTTON STATION
    controls the gate during set up.

19. "Siren" Terminal Block
    Vikings UL Siren is connected here. pg 8, 26

20. CONTROL BOARD MOUNTING HOLES
    secures and grounds the Control Board.

21. POWER HARNESS CONNECTOR
    provides power to the Control Board. pg 18-19

22. PRIMARY or SINGLE MOTOR CONNECTION
    provides power to the motor. pg 20

23. "FAIL SAFE/SECURE" Jumper
    power failure option. pg 25

24. FEATURE ACTIVATION TRIM POTS
    activate and set features. pg 24

25. "EPS1" CONNECTOR
    available for future developments

26. "EPS2" CONNECTOR
    available for future developments

27. "EMI" DATA CONNECTOR
    monitors the high voltage power supply.

28. "CHECK MOTOR" Status LED
    indicates motor power status. pg 36

29. "BATTERY LOW" Status LED
    indicates battery power status. pg 36

30. "POWER" Status LED
    Control Board power status. pg 18, 36

31. "MAGNETIC LOCK Relay" Status LED
    status of this on-board relay. pg 34, 36

32. "MAGNETIC LOCK Relay" Terminal Block
    connect electric locks here. pg 34, 36

33. INPUT STATUS LEDs
    indicates input status. pg 36-37

34. ACCESS CONTROL TERMINAL BLOCKS
    accessory connections. pg 28

GATE OPERATOR INSTALLATION

Plans of Installation - Pull to Open Option

This application is typically used to open the gate towards the inside of the property. The operator will "**PULL**" the gate to open.

1. The gate must be installed in a location so that enough clearance is provided between the gate and adjacent structures to reduce the risk of entrapment when opening and closing.
2. Swing gates are not to open into public access areas.

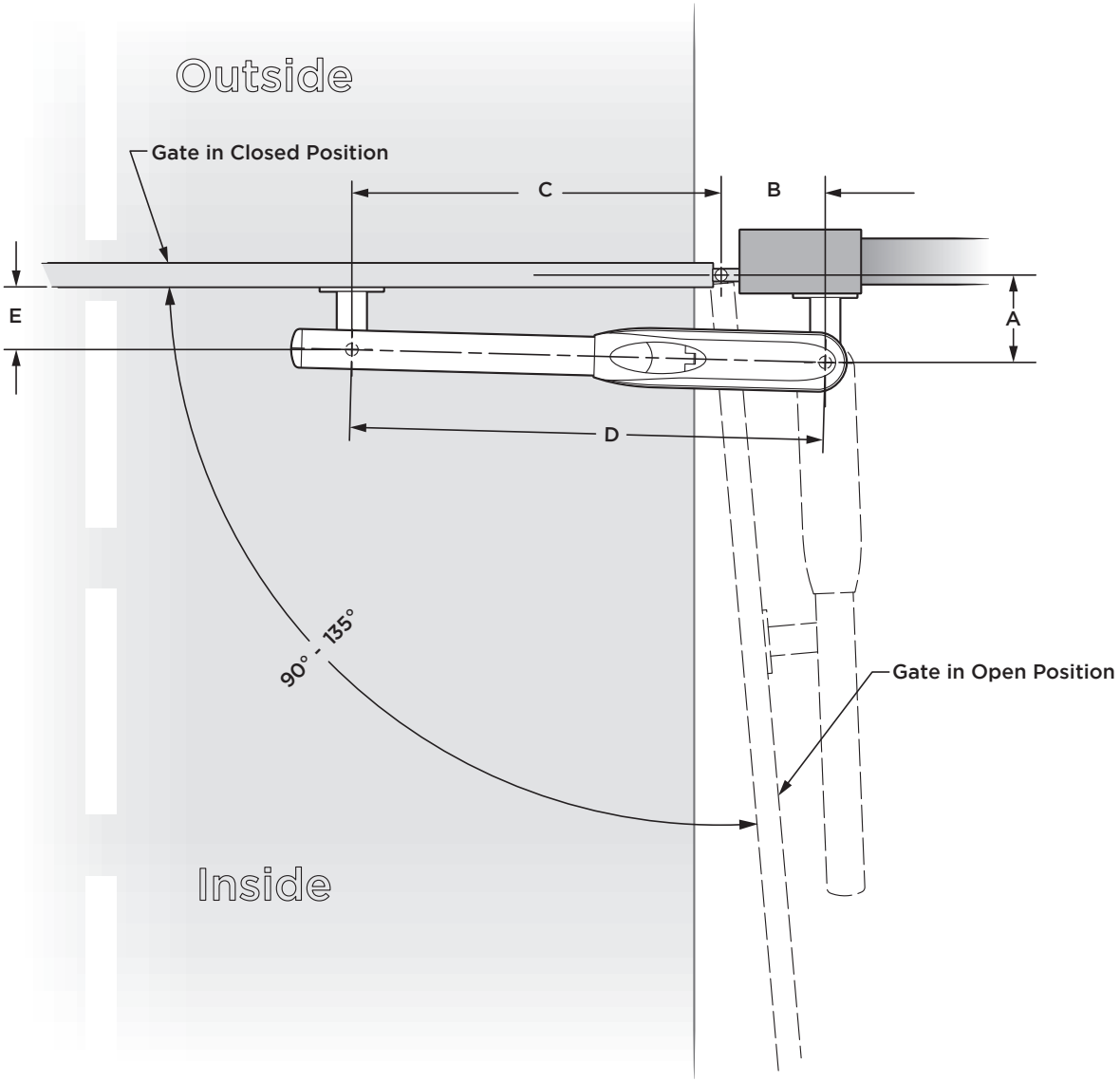

Range	A	B	C	D	E	Travel Speed
90° - 120°	6″	4 ½″	27″	31 ½″	4 ¾″	Faster
90° - 120°	6 ⅝″	7 ⅞″	28″	35 ⅞″	4 ¾″	Slower
121° - 135°	5 ½″	9″	27″	36″	4″	

⚠ Varying from the dimensions provided above may severely affect the speed and performance of the gate operator.

Plans of Installation - Push to Open Option

This application is typically used to open the gate towards the outside of the property. The operator will "**PUSH**" the gate open.

1. The gate must be installed in a location so that enough clearance is provided between the gate and adjacent structures to reduce the risk of entrapment when opening and closing.
2. Swing gates are not to open into public access areas.

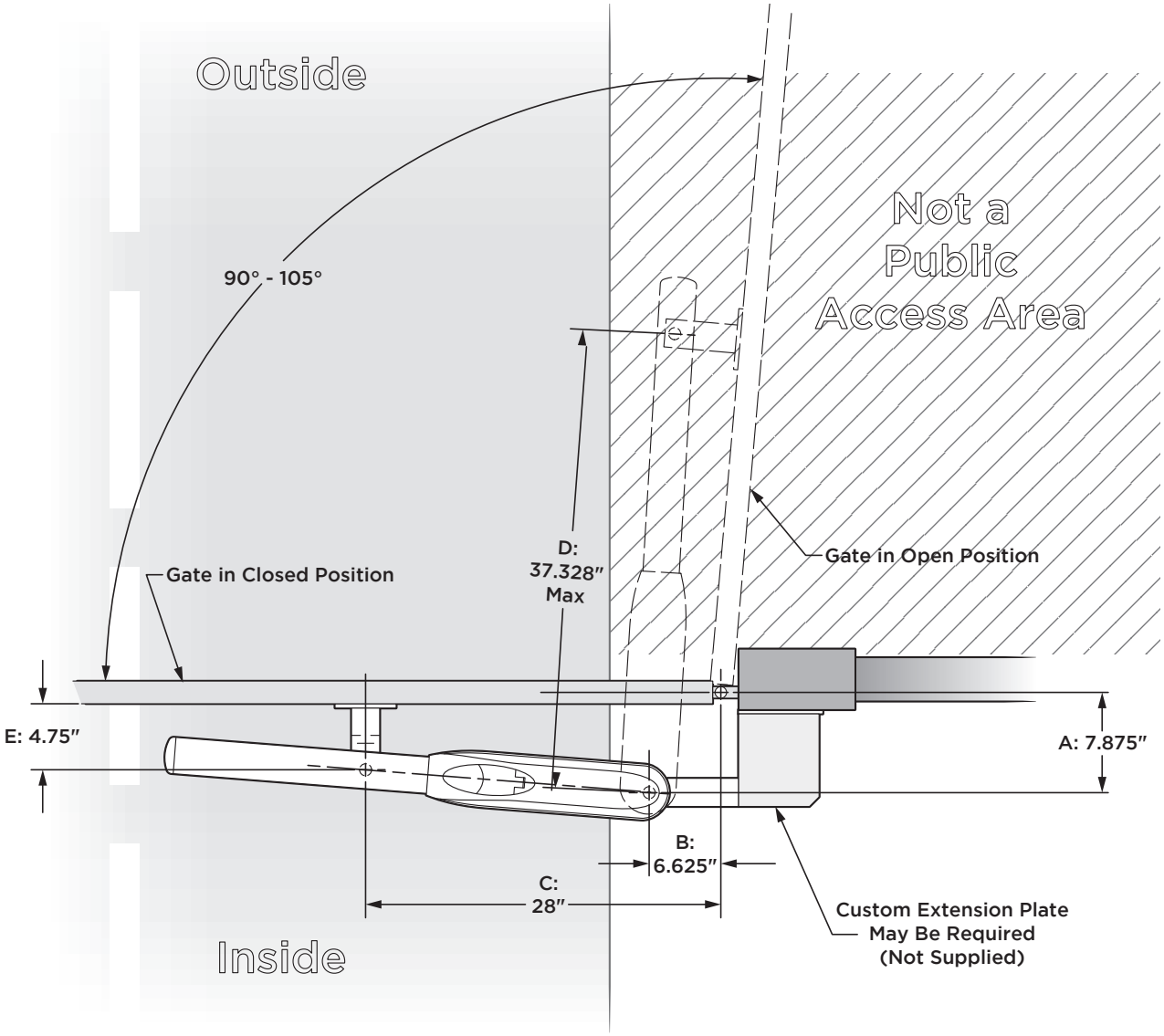

⚠ Varying from the dimensions provided above may severely affect the speed and performance of the gate operator.

GATE OPERATOR INSTALLATION

Mounting the Gate Operator

⚠ **Caution:** If the Front Mounting Bracket is not attached to a frame member that runs the full length of the gate, the gate operator may damage the gate. DO NOT attach the bracket or backing plate to just a few pickets.

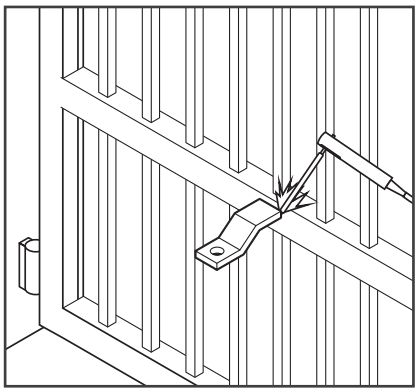

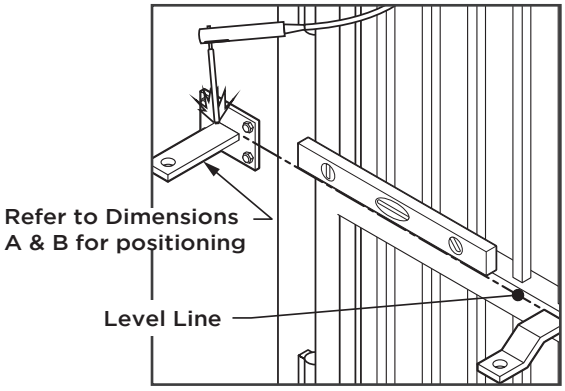

STEP 1

Front Mounting Bracket:

a. Position the bracket according to the dimensions provided on pages 12 or 13.

b. Ensure the bracket is level and tack weld in place.

⚠ **TIP:** Alternatively, if you choose to bolt this bracket to the gate, a backing plate has been provided with four bolt holes.

STEP 2

Back Mounting Bracket:

a. Cut and position the bracket according to pages 12 or 13.

b. Ensure the bracket is level and tack weld in place.

⚠ **TIP:** Alternatively, if you choose to bolt this bracket to the gate, a backing plate has been provided with four bolt holes.

STEP 3

Mount the Gate Operator:

a. Install the operator onto the mounting brackets using the hardware provided.

b. Place the Manual Release Switch in the "Release" position. Refer to page 7.

c. Manually move the gate to ensure the gate and operator move freely.

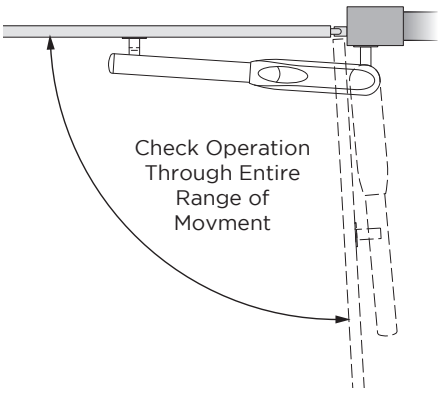

STEP 4

Complete the Installation:

a. Dismount the operator.

b. Complete the welding process.

c. Lubricate the front bracket pivot point.

d. Reinstall the gate operator and verify once again that the gate moves freely.

e. Place the Manual Release Switch back to the "Engage" position.

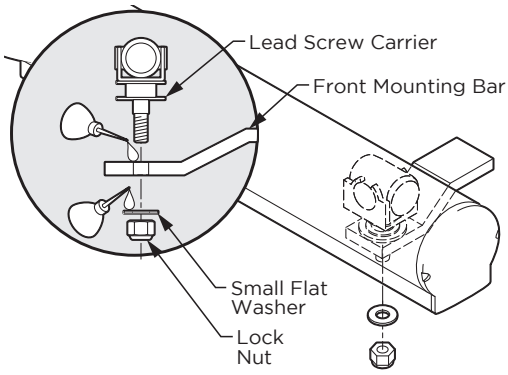

Post Mounting Option

A Post Mount Kit is available for the G-5 Operator as an option to welding the operator Mounting Brackets to the gate and column. **Part # VA-G5PSKT**

1. Mounting hardware provided for 3 1/2” round, 4” and 6” square posts.
2. Mounting Brackets are galvanized 1/4” steel.

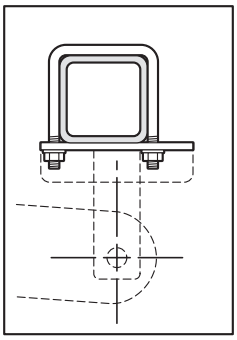

4" Square Pipe
Open Left

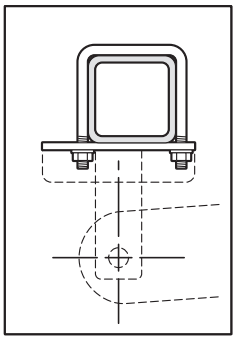

4" Square Pipe
Open Right

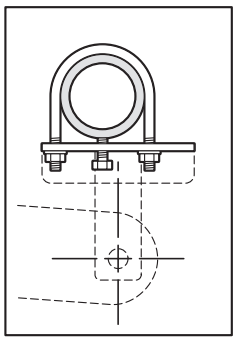

3-1/2" Round Pipe
Open Left

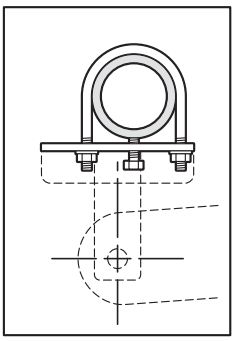

3-1/2" Round Pipe
Open Right

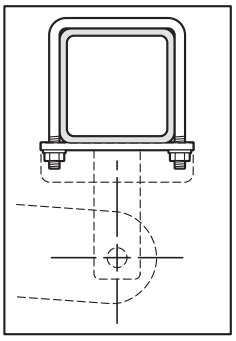

6" Square Pipe

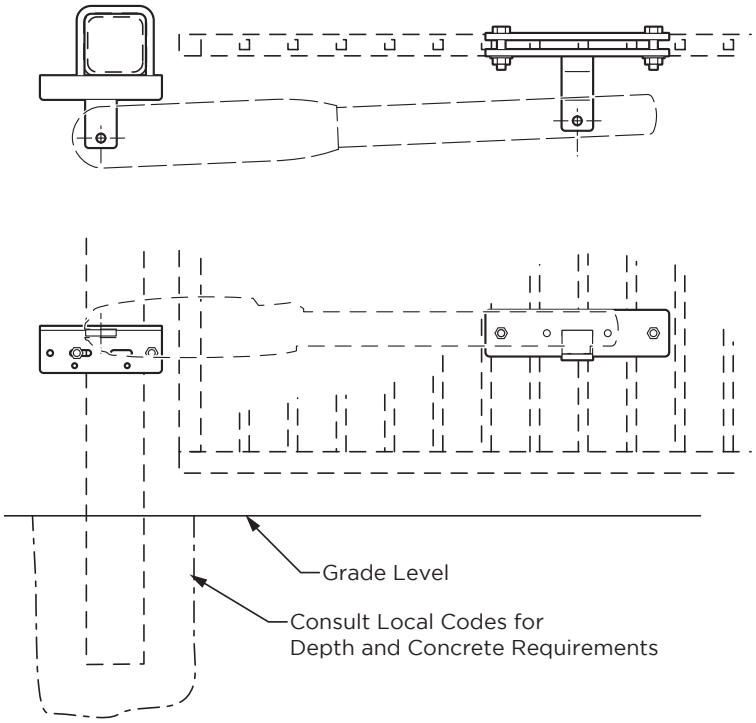

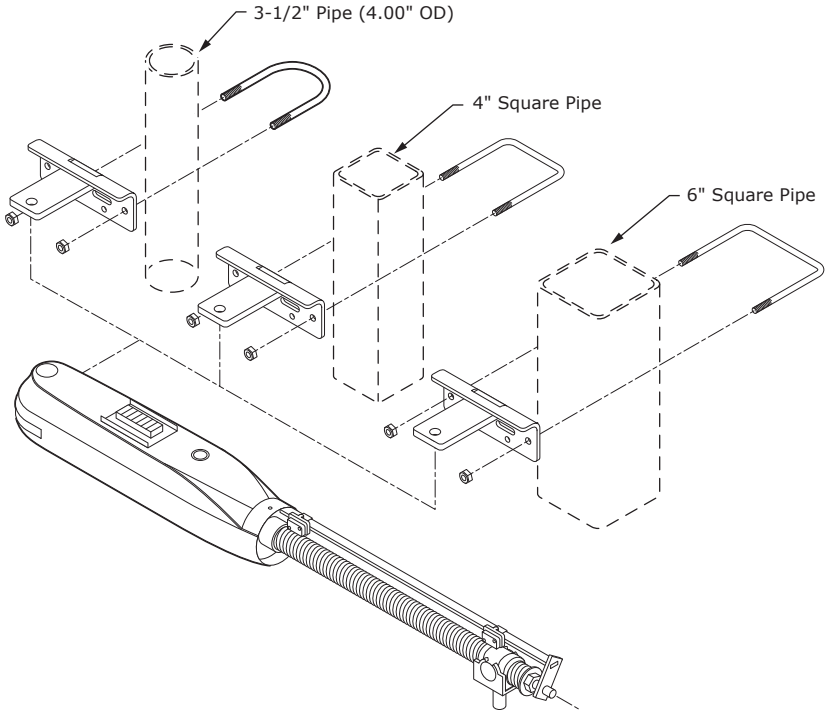

GATE OPERATOR INSTALLATION

Limit Switch Setup

STEP 1

Remove the Lead Screw Cover:

a. Remove the cover mounting screw.

b. Slide the cover off.

⚠ **TIP:** Leave the cover off until after the installation of the ECU Box and electrical installation. Verify that the operator opens and closes to the desired limit positions under power. Make any adjustments as necessary

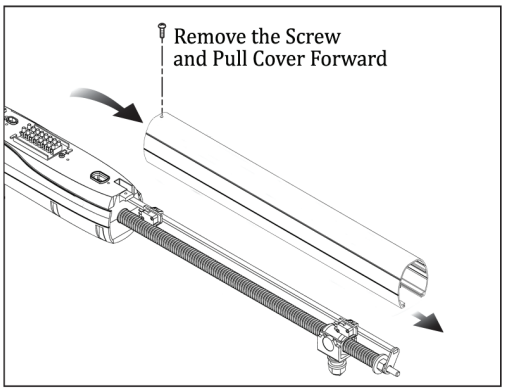

STEP 2

Position the Limit Switches:

a. Loosen the setscrews on the Limit Switch Holders and slide the Limit Switches to the desired positions.

b. Move the gate manually and ensure the Limit Switches are actuated (click) at the desired open and closed positions.

c. Re-secure the Limit Switch Holders when the proper position has been determined. DO NOT OVERTIGHTEN

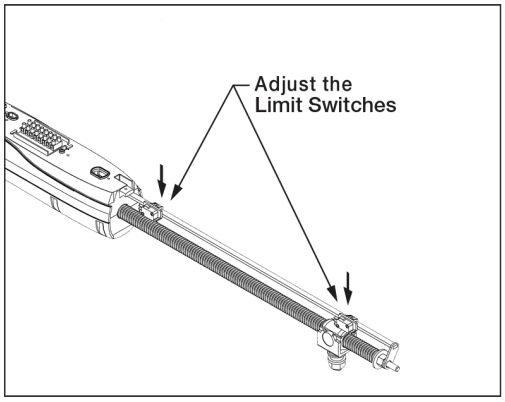

STEP 3

Close Limit Positive Stop Collar:

a. After the limit positions have been verified, partially open the gate and position the Positive Stop Collar as shown, after the Close Limit Switch, with a 1/8” gap between the Collar and the Limit Switch Holder.

b. Tighten the Collar EVENLY to secure.

c. Run the gate two complete cycles and check that the Lead Screw Carrier makes firm contact to the Positive Stop Collar.

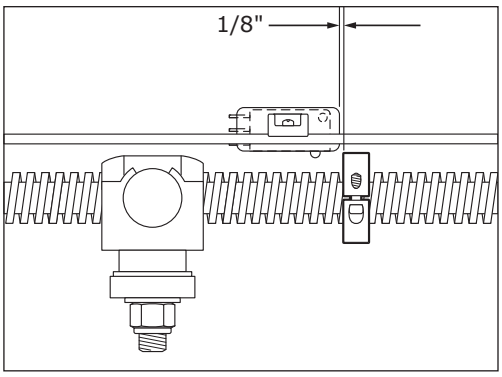

STEP 4

Reinstalling the Lead Screw Cover:

a. Ensure that the End Cap is properly positioned over the tip of the Lead Screw as shown.

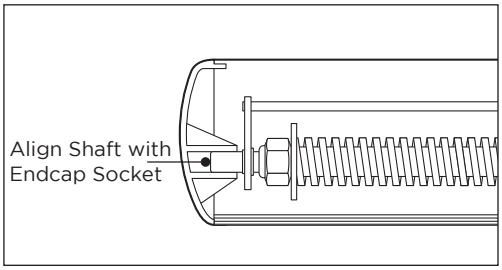

Mounting the ECU Box

⚠ **WARNING:** If the control box is not mounted properly it may fall, causing damage and/or injury. The Electronic Control Unit (ECU) weight is approximately 40 lbs. Be sure that the substrate being mounted to and the fasteners being used are appropriate to support the weight of the control box.

Substrate Mounting Option

- Hardware is not provided.
- Use 3/8” hardware.
- Consult local codes and guidelines.

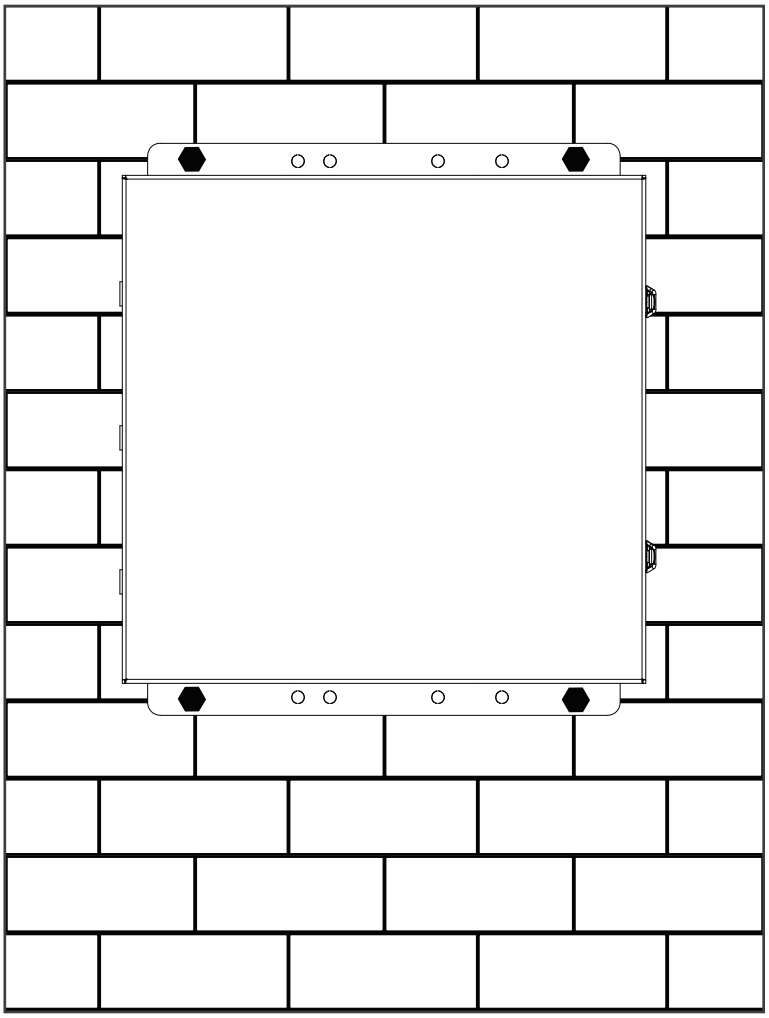

Post Mounting Option

- Hardware is not provided.
- Use 3/8” hardware.
- 3”, 4” or 6” square post.
- Consult local codes and guidelines.

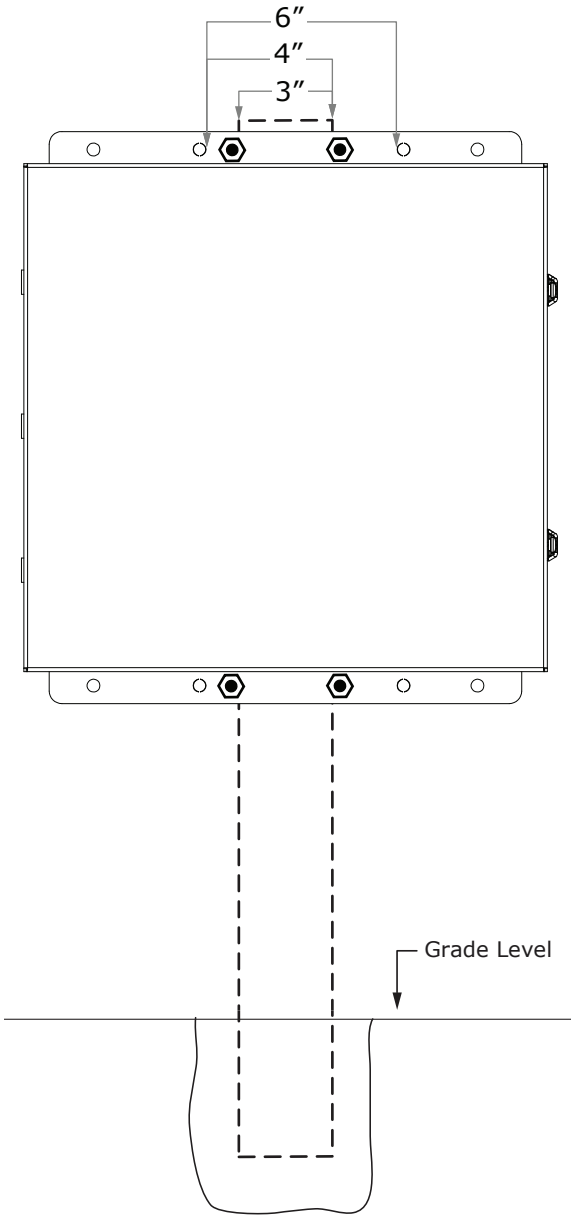

ELECTRICAL INSTALLATION - STANDARD ECU

High Voltage Supply Option

⚠ **Caution:** Always turn off power breakers when working with high voltage. DO NOT connect the "Power Harness" to the Control Board until the electrical installation is complete and ready for verification.

STEP 1 : 115 VAC

⚠ **Tip:** Factory Default Configuration.

a. "Voltage Selector" is set to "115"

b. EMI Board White wire is connected to the White Neutral wire from the Receptacle Assembly as depicted.

STEP 1 : 230 VAC

⚠ **WARNING:** SINGLE PHASE AC ONLY

a. Remove the Control Board Mounting Plate.

b. Removed the Receptacle Bracket Assembly.

c. At the EMI Board, set the "Voltage Selector" to "230"

d. Remove the EMI Board White wire and reconnect it to the Red wire as depicted.

STEP 2 :

a. Connect the incoming power wires to the terminals as shown in the illustration.

b. Ground the ECU cabinet according to local code or guidelines.

c. Turn on the main facility breaker and verify that all three (3) Status LEDs are illuminated on the EMI Board.

d. Turn the AC Power and Battery Switch to the "Reset" position.

e. Connect the Control Boards Power Harness.

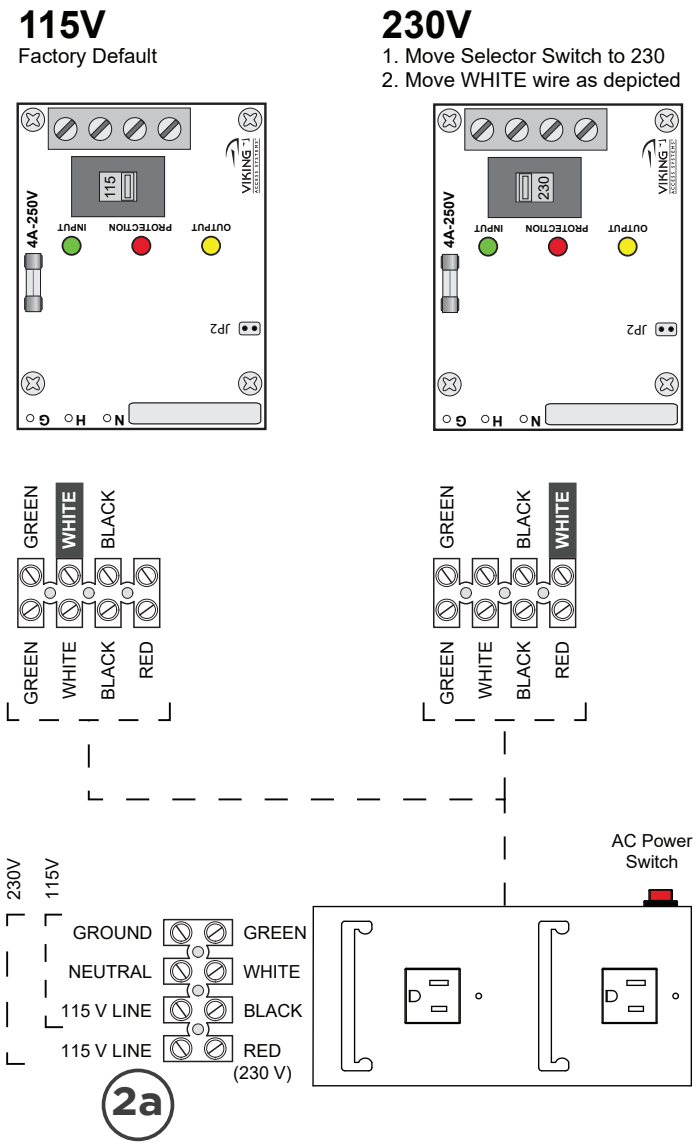

Tips for proper ground installation:

To minimize the effects caused by lightning, follow these guidelines:

- Use a ground rod to provide a ground reference.
- Consult your city code and be aware of underground services in the site of the gate operator to prevent inconveniences.
- All ground wires must be as short and as thick as possible.
- Always use a single bonding point for grounding.
- Connect the Earth Ground and Power Ground wires together.
- Prevent unnecessary turns or loops in all ground wires.

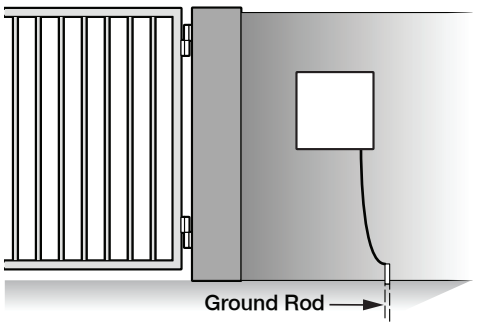

ELECTRICAL INSTALLATION – STANDARD ECU

Low Voltage Supply Option

TIP: As an alternative to high voltage, the operator can be powered by 24VAC. It is recommended to use Vikings Modular Power Box (**part # VNXMPB**) as the source.

⚠ **Caution:** Always turn off power breakers when working with high voltage. DO NOT connect the "Power Harness" to the Control Board until the electrical installation is complete and ready for verification.

Install the "Modular Power Box" at the nearest high voltage source (115V or 230V single phase) and connect to the controller's Power Harness. Follow local codes or guidelines.

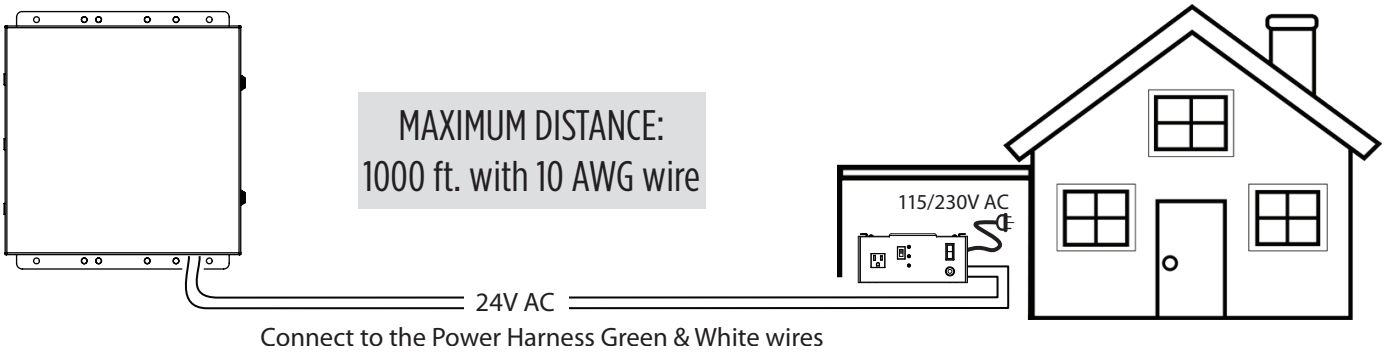

Solar Supply Option

Vikings Solar Package (**part # VA-SOCHP**) is an efficient and effective solution to powering the operator with solar energy. (See page 58 for package details)

⚠ **Tip:** Solar efficiency can be increased by activating the "Pre-Warning" (A) feature. The "Aux. Pwr" (B) terminals will provide 24VDC to all nonessential controls, beginning 3 seconds prior to gate movement, until the gate reaches either limit. (page 25)

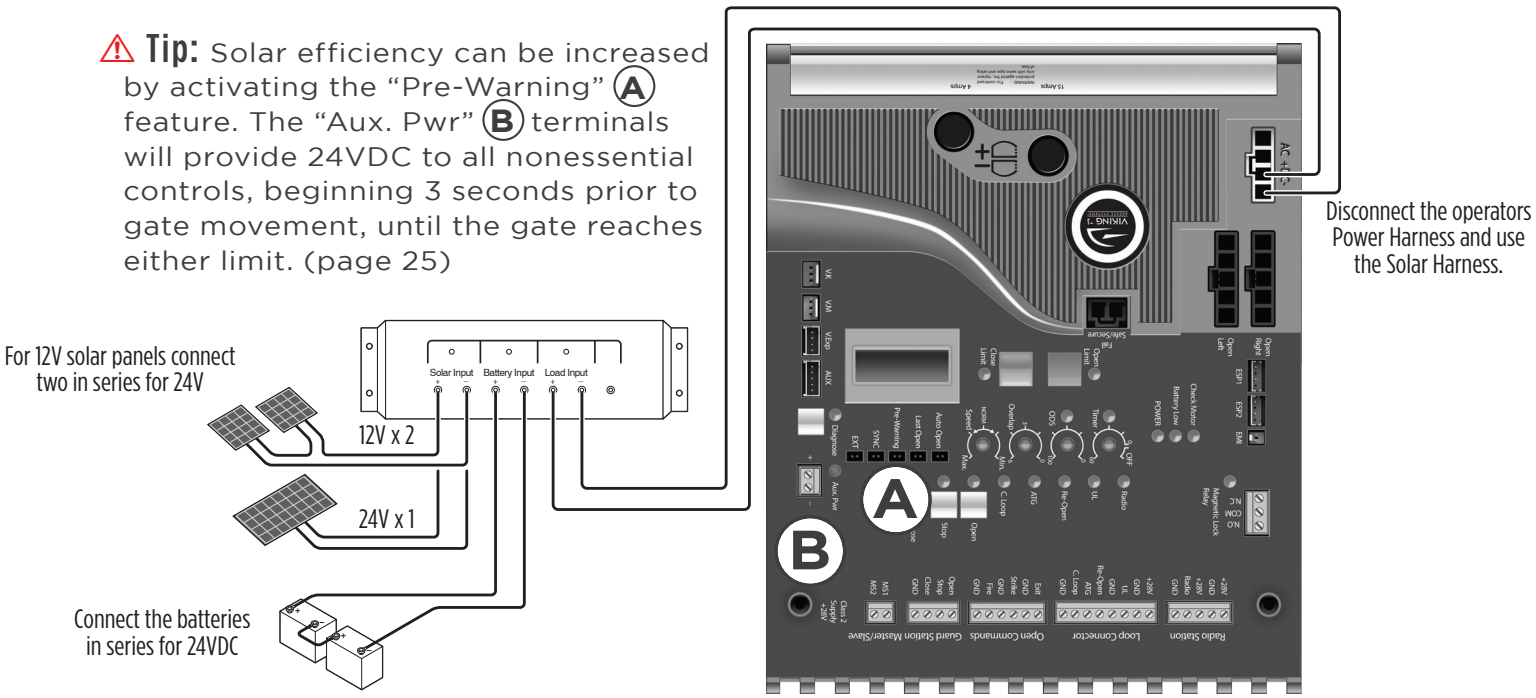

⚠ The number of cycles achieved daily is dependent on many factors, including local solar radiation data and power consumption of the motor and accessories. It is very important that you consider this when using solar power.

ELECTRICAL INSTALLATION – STANDARD ECU

Motor Cable - Primary (Single)

NOTE: The Single Electronic Control Unit is equipped to operate a single gate motor only, and does not include a Secondary Module. The steps described on page 21 do not apply for this type of application.

STEP 3

Primary Motor:

a. Connect motor cable to the Motor Connector at the Primary Control Board as illustrated, according to the printed color code.

b. Attach the grounding wire, non insulated, to the Board Mounting Plate using the screw provided.

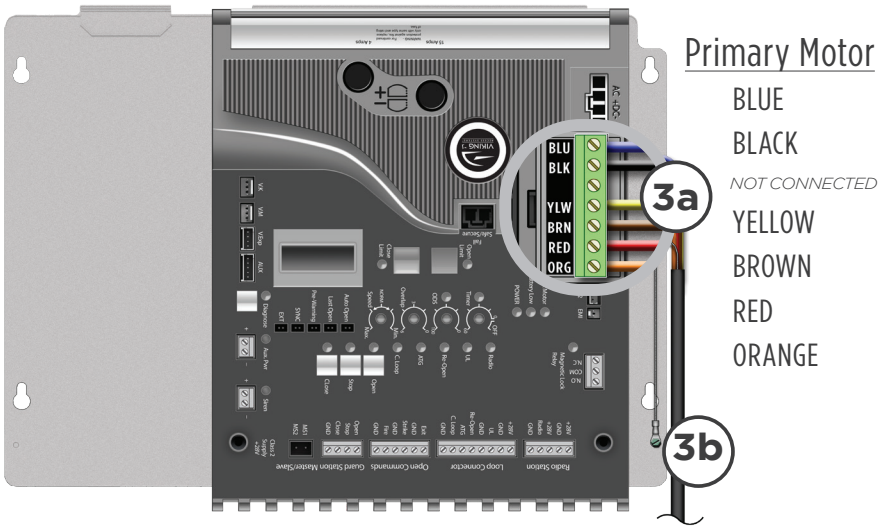

STEP 4

Primary Open Left or Open Right:

Place the terminal block in the proper location for the gate opening direction.

- "OPEN RIGHT" Connector if the gate opens to the INSIDE **(pull to open)**.
- "OPEN LEFT" Connector if the gate opens to the OUTSIDE **(push to open)**.

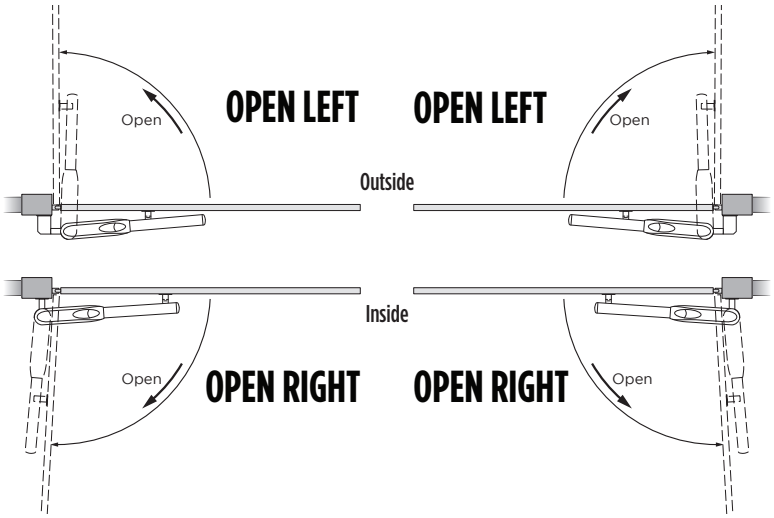

ELECTRICAL INSTALLATION – STANDARD ECU

Motor Cable - Secondary (Dual)

NOTE: The Primary/Secondary, or Dual, Electronic Control Unit is equipped with both the VFlex Control Board (Primary) and a Secondary Module, both are required to operate two gate motors in tandem.

STEP 5

Secondary to Primary Connections:

a. Ensure that the Secondary Power Harness is connected as illustrated.
Polarity is important! **Red to "+"**
Black to "–"

b. Ensure that the Primary/Secondary Communication Cable is connected as illustrated.

STEP 6

Secondary Motor:

a. Connect motor cable to the terminal block at the Secondary Module as illustrated, according to the color code provided.

b. Attach the grounding wire (non insulated) to the Board Mounting Plate using the screw provided.

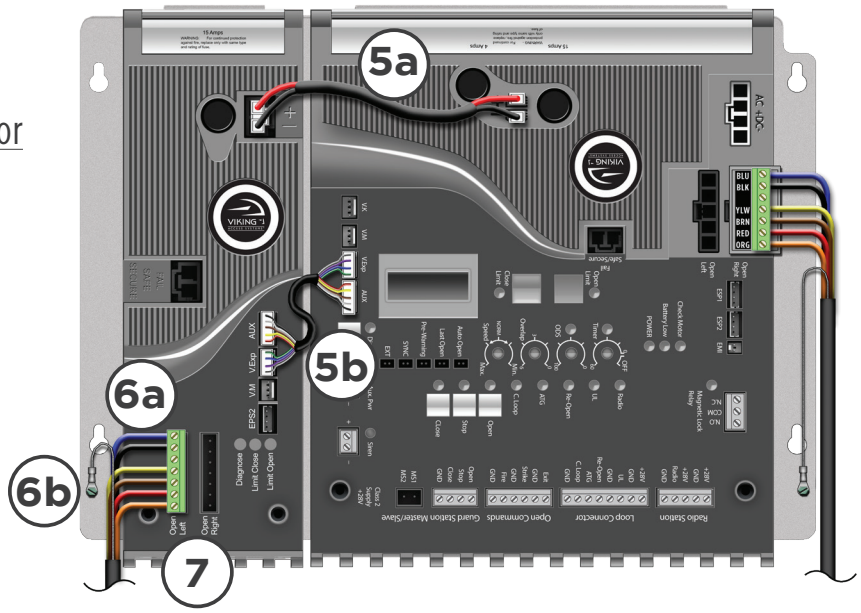

Secondary Motor

BLUE
BLACK
NOT CONNECTED
YELLOW
BROWN
RED
ORANGE

Primary Motor

BLUE
BLACK
NOT CONNECTED
YELLOW
BROWN
RED
ORANGE

STEP 7

Secondary Open Left or Open Right: Refer to the illustration on page 20.

Place the terminal block in the proper location for the gate opening direction.

- "OPEN RIGHT" Connector if the gate opens to the INSIDE **(pull to open)**.
- "OPEN LEFT" Connector if the gate opens to the OUTSIDE **(push to open)**.

Reference Wiring Diagram

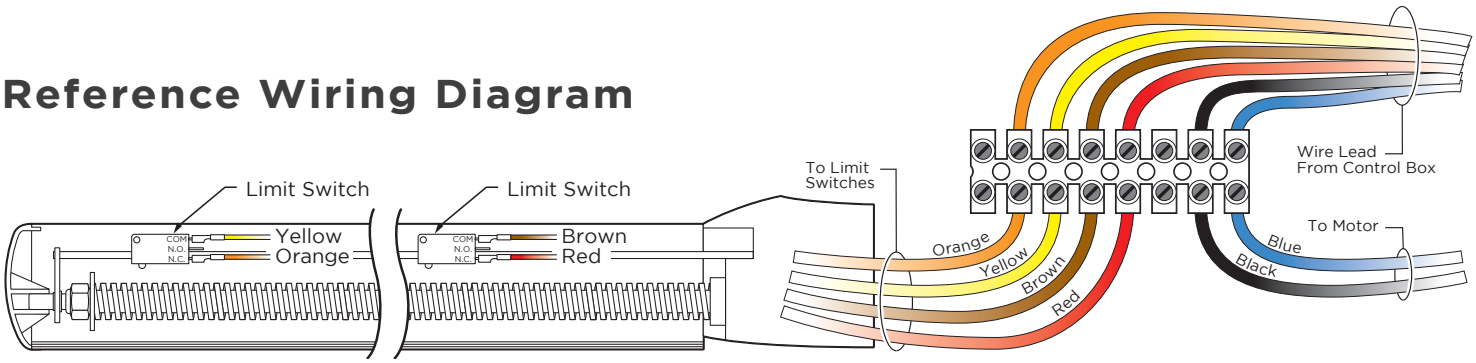

ELECTRICAL INSTALLATION – STANDARD ECU

MONITORED UL SENSOR CONNECTIONS

UL (Monitored Input Terminal)

The "UL" input terminal protects against entrapment in both the opening and closing directions. Input will reverse the gate momentarily in the opposite direction it was traveling when a connected device it triggered. Pages 6-7.

Re-Open (Monitored Input Terminal)

The "Re-Open" input terminal protects against entrapment in the closing direction ONLY. Input will reverse the gate all the way to the Open Limit when a connected device it triggered. Pages 6-7.

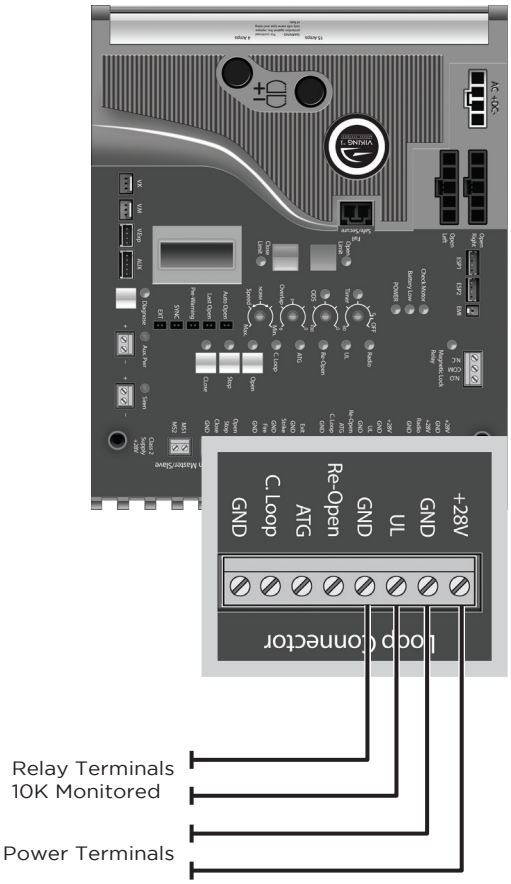

NOTE: The "Stop" LED will be illuminated if there is a failure with at least one monitored entrapment sensor and the gate operator will be rendered inoperable.

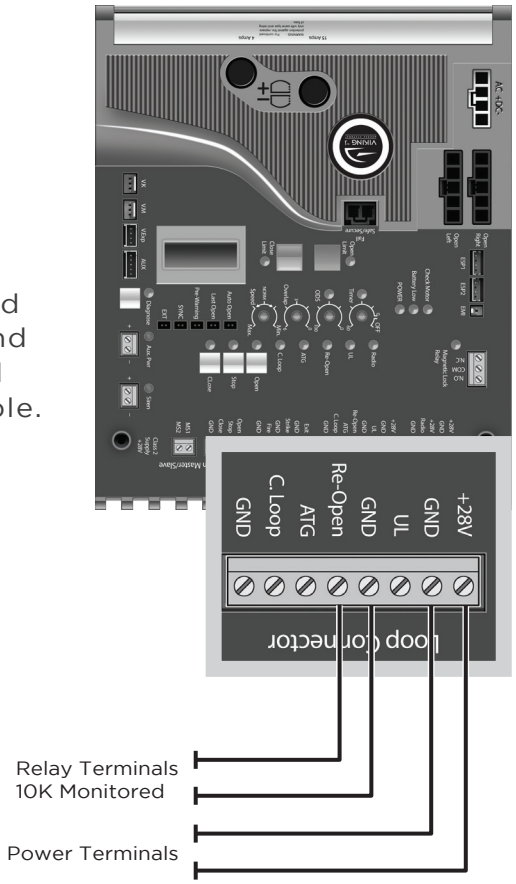

Check for proper operation:

When a connected device is triggered, the "UL" LED will illuminate and, if more than one Monitored device connected, the "Stop" LED will flash rapidly to indicate an input.

⚠ If more than one Monitored device is connected to this terminal, the "UL" LED will be illuminated. This alone is inconsequential.

Check for proper operation:

When a connected device is triggered, the "Re-Open" LED will illuminate and, if more than one Monitored device connected, the "Stop" LED will flash rapidly to indicate an input.

⚠ If more than one Monitored device is connected to this terminal, the "Re-Open" LED will be illuminated. This alone is inconsequential.

⚠ **TECHNICAL TIP:** For more information regarding accessory connections to the Control Board and individual input terminal functions, refer to pages 28-29.

LIMIT INDICATIONS

⚠ **IMPORTANT:** The gate operator uses mechanical limits. Therefore, the limits cannot be set electronically by this controller. The Limit Buttons on the Control Board have been rendered inactive by the controller. Refer to page 16 for specific instructions on how to set the limits for this gate operator..

⚠ **TECHNICAL TIP:** The Limit LEDs will illuminate solid when this operator reaches its corresponding limit. If both Limit LEDs are illuminated at the same time, this indicates that there is a problem with the limit switches or wiring.

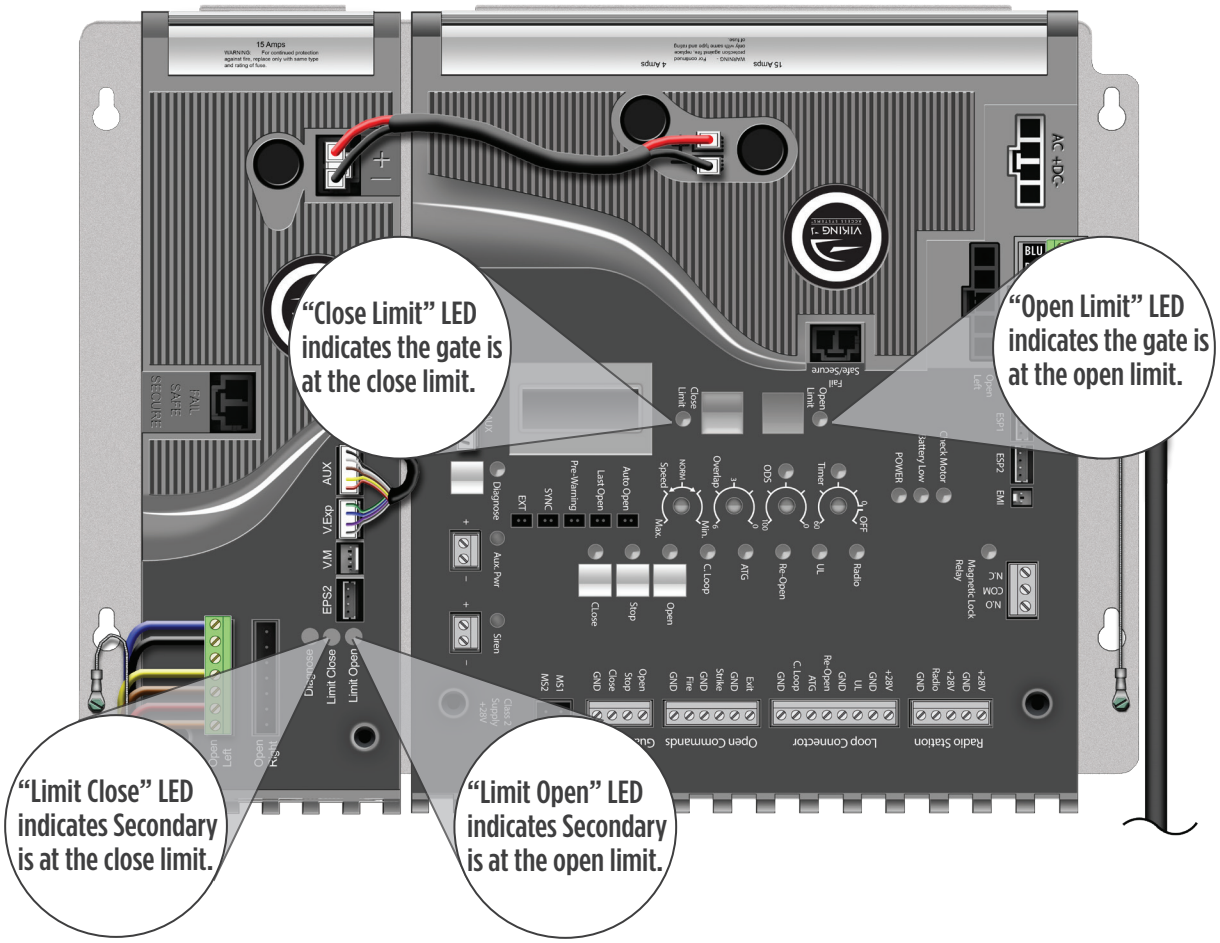

CONTROL BOARD SETUP

Initial Settings

“Speed”
Motor Speed

Increases or decreases the speed of gate travel.

“ODS”
Obstruction Detection Sensor

Sets the amount of force required to trip the inherent obstruction sensor.

See page 26 for more details about this feature.

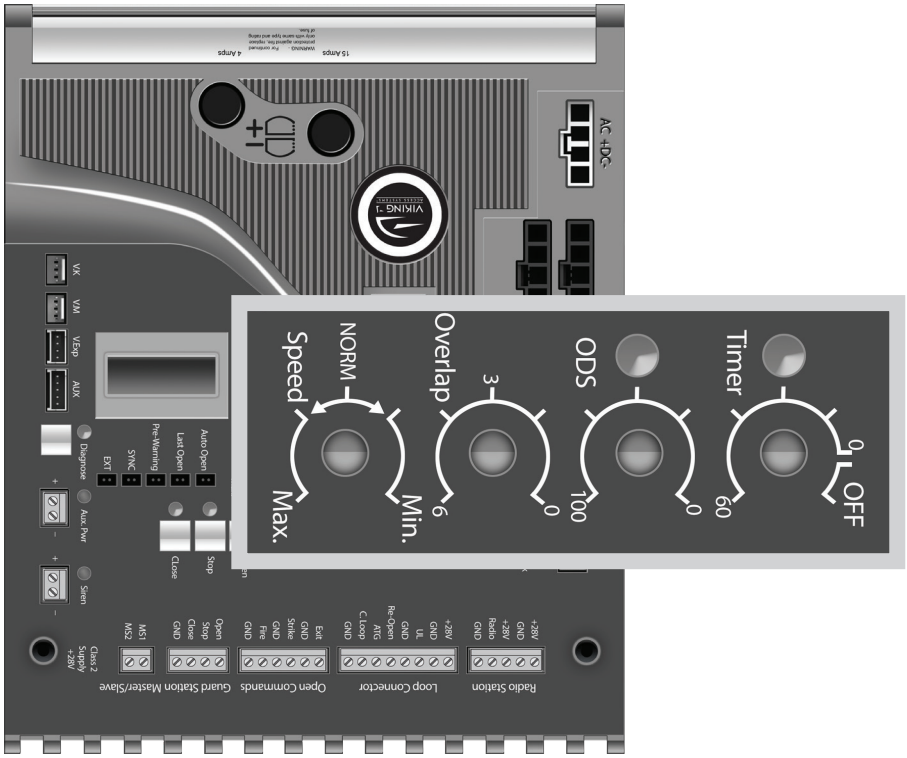

“Overlap”
Overlap Delay

Delays the gate from opening for the selected amount of time from 1-6 seconds.

⚠ For Primary/Secondary or dual applications, the Primary will delay to open and the Secondary will delay to close.

“Timer”
Hold Open Timer

Automatically closes the gate after the selected amount of time from 1-60 seconds.

Turning the dial between “0” and “OFF” will disable this feature, requiring a close command to close the gate.

Initial Settings

NOTE: Installing a shunt, or jumper, on the pins will activate the feature.

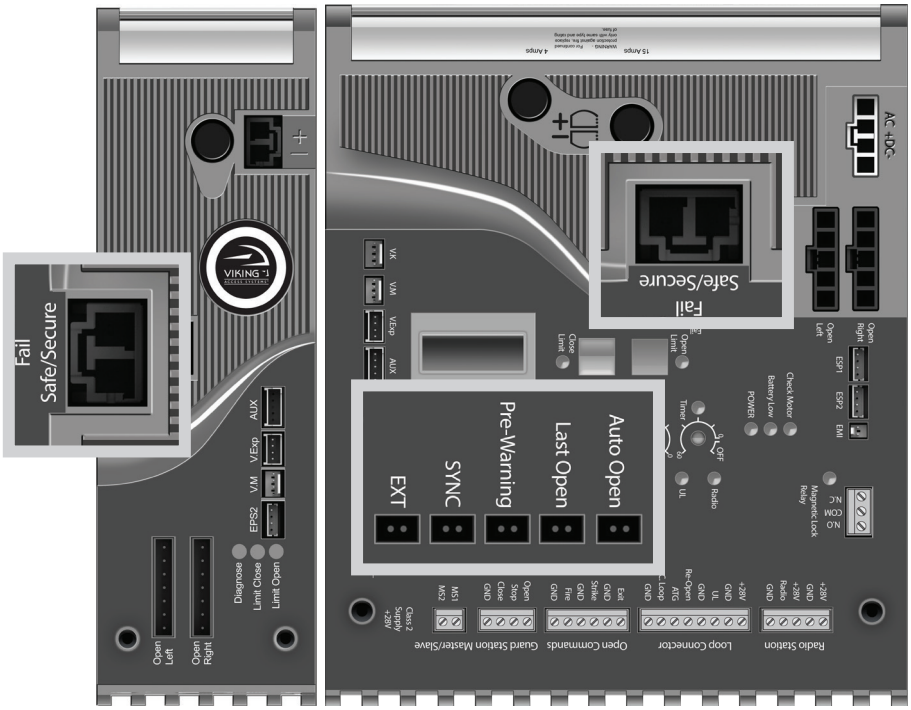

"Auto Open" - Power Failure Option

Opens the gate automatically during power failure. Resumes normal operation when power is restored.

⚠ This Feature is disabled on Solar ECU.

"Fail Safe/Secure"

During power failure, determines the force required to manually move the gate.

- **Fail Safe Mode:**

  By removing the wire-jumper plug from the "Fail Safe/Secure" connector:

  The gate can move manually with a relatively low amount of force.

- **Fail Secure Mode:**

  By inserting the wire-jumper plug into the "Fail Safe/Secure" connector:

  The gate will require more effort to manual move.

"Last Open" - Power Failure Option

Opens the gate automatically when the battery backup voltage is critically low.

"Pre-Warning"

Initiates two options for an audible or visual warning 3 seconds prior to gate motion and will continue:

1. **Until gate reaches closed limit:** "Magnetic Lock" terminals provide a contact between "COM" and "N.O.".
2. **Until gate reaches either limit:** "AUX. PWR" terminals provide 24VDC.

"Sync"

Used only in conjunction with Barrier Arm Operators. Activating this feature allows for synchronized operation with Barrier Arm Operators. See page 35.

"EXT"

Available for future developments.

CONTROL BOARD SETUP

Obstruction Detection Sensor (ODS)

⚠ **IMPORTANT:** The appropriate "ODS" setting is dependant upon the gate installation and construction. Set this feature accordingly. Additional Safety equipment should be used to reduce possible risk of injury or vehicle damage.

"ODS" Obstruction Detection Sensor

The Obstruction Sensor detects obstructions in the path of the traveling gate. The dial sets the amount of force required to activate the operators inherent obstruction detection.

Setting the dial to "0" will require the least amount of force to activate;

Setting the dial to "100" will require the maximum amount of force to activate.

UL 325 standard requires an audible alarm to go off after two consecutive entrapment events sensed by the Inherent Entrapment Protection of the Gate Operator.

The audible alarm will sound for a period of 5 minutes or until a Stop command or the "Alarm Reset" switch has been actuated. (refer to page 8)

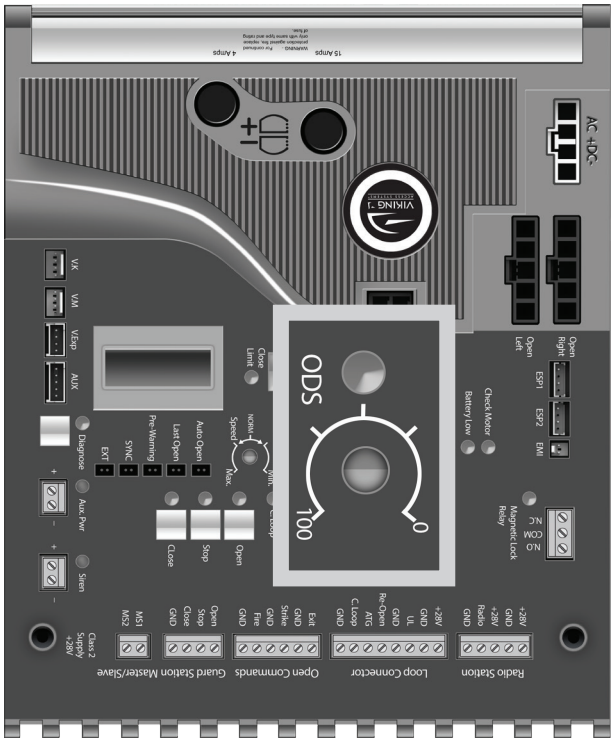

When the Obstruction Sensor detects an obstruction it will:

1. Stop the gate's movement and reverse it momentarily.
2. Bring the gate to a resting position.
3. Disable the Hold Open Timer feature until the Gate Operator receives a new command.

If second obstruction is detected before the gate reaches either limit it will:

1. Stop the gate's movement.
2. Disable the Gate Operator.
3. Sound the UL Alarm
4. A STOP command must be provided to disable the alarm and continue operation.

⚠ **TECHNICAL TIP:** The Status LED for the "ODS" will indicate the following when it has been triggered.

A. Solid: Obstruction.
Detected a sudden or abrupt increase in gate resistance.

B. Flashing: Overload.
Detected a more subtle, but sustained increase in gate resistance.

Viking Heater

The operator has an integrated heater. Activate this feature when the operator is used in application temperatures down to -20°F (-29°C).

⚠ This Feature is disabled on Solar ECUs.

To set the heater to turn on at the Close Limit:

1. Use the “Diagnose” button to scroll through the LCD Display to “HEATER CLS”
2. Press and hold the “Stop” button on the Control Board.
3. Press and release the “Diagnose” button to turn this feature ON and OFF.

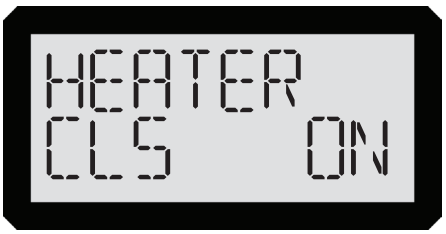

To set the heater to turn on at the Open Limit:

1. Use the “Diagnose” button to scroll through the LCD Display to “HEATER OPN”
2. Perform steps 2-3 as described above.

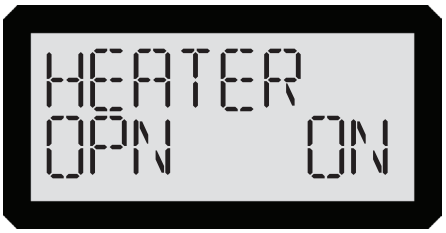

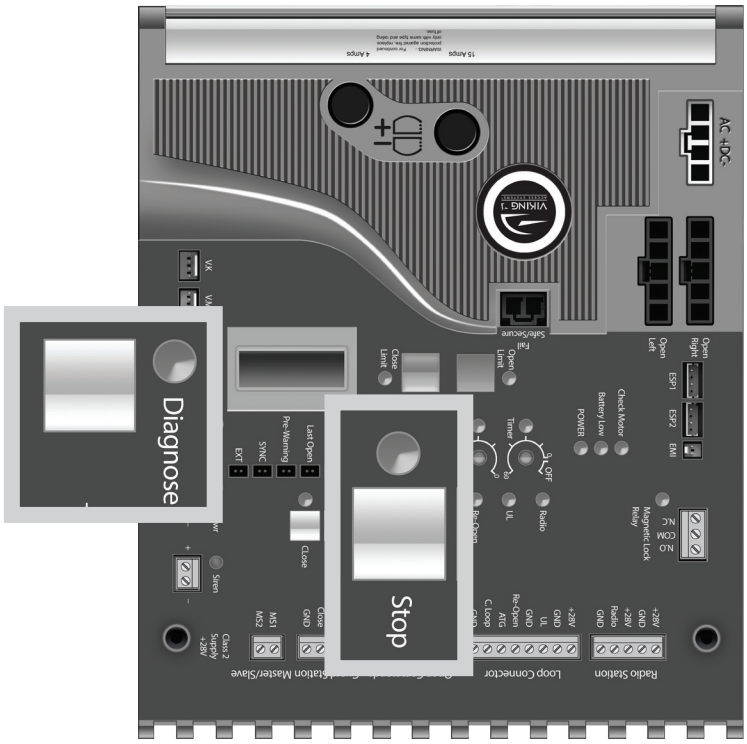

NOTE: If the application requires the gate to be held open for any reason, set the HEATER ON for both limit positions.

⚠ **IMPORTANT:** AN EXTERNAL POSITIVE STOP **must** be used on the gate at the limit position(s) the HEATER has been set for.

Viking Lock Mode

⚠ Standard ECU: feature is always ON and the menu is not available on the LCD Display.

⚠ Solar ECU: turning this feature ON will help to secure the gate at the closed position, preventing unauthorized manual entry but may consume battery power during high wind conditions.

Use the LCD Display to activate this feature.

1. Use the “Diagnose” button to scroll through the LCD menu to “LOCK MOD”
2. Press and hold the “Stop” button on the Control Board.
3. Press and release the “Diagnose” button to turn this feature ON and OFF.

ACCESSORY CONNECTIONS

Access Control Connections

Power Connections

The Control Board provides a 24VDC output to power external devices and controls.

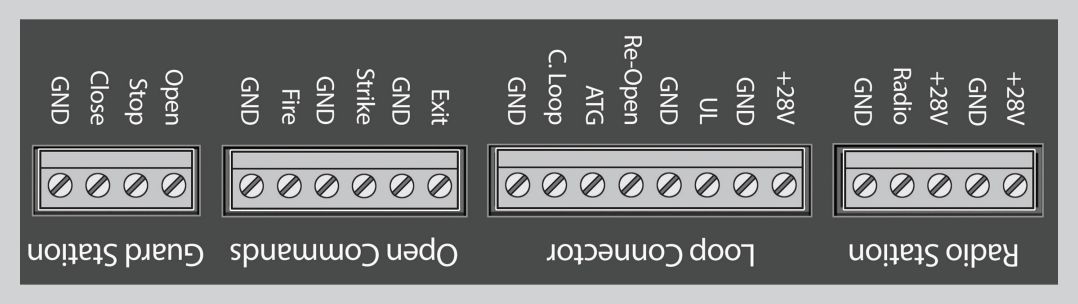

"C"	=	**Common**
"N.O."	=	**Normally Open**

Terminals Connections and Input Functions:

Viking Terminal		Function		Device Terminal
"+28V"	----------	*DC Positive*	----------	**"+"**
"GND"	----------	*DC Negative*	----------	**"–"**
"GND"	----------	*Relay Common*	----------	**"C"**
"Radio"				**"N.O."**
	If "Timer" OFF:	Open - Stop - Close		
	If "Timer" ON:	Open / Reopen if closing		
"UL"	(see pages 6-7 & 22)			**"N.O."**
	If stopped:	Prevents the gate from moving		
	If traveling:	Stops then reverses gate momentarily		
"Re-Open"	(see pages 6-7 & 22)			**"N.O."**
	If stopped:	No function		
	If closing:	Stops then Opens gate		
"ATG" Anti-Tailgate				**"N.O."**
	Input is received:	Stops gate if closing		
	Input is released:	Closes gate to prevent tailgating		
"C. Loop"				**"N.O."**
	If not at open limit:	No function		
	If at open limit:	Prevents gate from Closing		
"Open", "Exit", "Fire" & "Strike"				**"N.O."**
	If stopped:	Opens gate		
	If closing:	Stops then Opens gate		
"Stop"				**"N.O."**
	If traveling:	Stops gate		
"Close"				**"N.O."**
	If stopped:	Closes gate		
	If traveling:	No function		

⚠ **TECHNICAL TIP:** Each input Terminal (i.e. Radio, Exit, Re-Open, UL) has a corresponding Status LED that when illuminated indicates an input is currently being provided to the terminal and the gate is responding accordingly. (See pages 36-37 LED References)

Access Control Connections

Relays In General

In regards to the Viking Control Board, all external safety devices and access controls contain, and are, simple relays that provide an input to the Viking Control Board when the device is activated.

When these devices are activated, their internal relays create a contact, or short, between the "C" and "N.O." terminals. This contact is what provides the command to the Viking Control Board.

⚠ **TECHNICAL TIP:** Viking uses the Normally Open "N.O." contact from the device, excluding "fail-safe" type photo beams. In such instances, the Normally Closed "N.C." will be used instead.

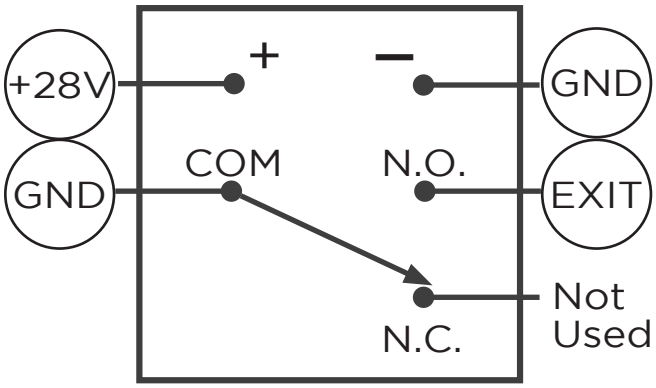

Glossary of Terms

1. **Terminal:** Wire Connections.
2. **Input Terminal:** On the Viking Control Board, the terminal which is labeled for a specific command (Re-Open, Exit, Radio, etc.). The N.O. contact from the access control device is to be connected to the Input Terminal.
3. **Terminal Block:** On the Viking Control Board, a removable block containing multiple terminals.
4. **Relay:** The component of an access control or safety device that provides an input or command to the Viking Control Board.
5. **"C" Relay Common Terminal:** This is the relay terminal that makes contact (a short) to the N.O. terminal when the device is activated. *Always wire this relay terminal to any "GND" terminal at the Control Board.*
6. **"N.O." Relay Normally Open Terminal:** The relay terminal that has an open contact to "C" while the relay is not activated, and a closed contact when the relay is activated. *Almost always wire this relay terminal to an "Input Terminal" at the Control Board,*
7. **"N.C." Relay Normally Closed Terminal:** The relay terminal that has a closed contact to "C" while the relay is not activated, and an open contact when the relay is activated. *This terminal is rarely used.*
8. **Relay Coil:** Contains the terminals that provide power at the relay.
9. **"+" Relay Positive Terminal:** The positive power pole for the relay coil. *Always wire this relay terminal to any "+28V" terminal at the Control Board.*
10. **"−" Relay Negative Terminal:** The negative power pole for the relay coil. *Always wire this relay terminal to any "GND" terminal at the Control Board.*

ACCESSORY CONNECTIONS

Radio Receiver

NOTE: The operator may be supplied with a **XR2N** Radio Receiver PN# 787023 and (2) XT4RC Transmitters PN# 78745301.

STEP 1

Wire the Radio Receiver as illustrated.

⚠ **TECHNICAL TIP:** The XR2N Radio Receiver is IP44 rated for water resistance and can be mounted outside of the operator cover if desired.

STEP 2

Program the XT4RC Radio Transmitters to the XR2N Radio Receiver. Follow the instructions provided with the Transmitters.

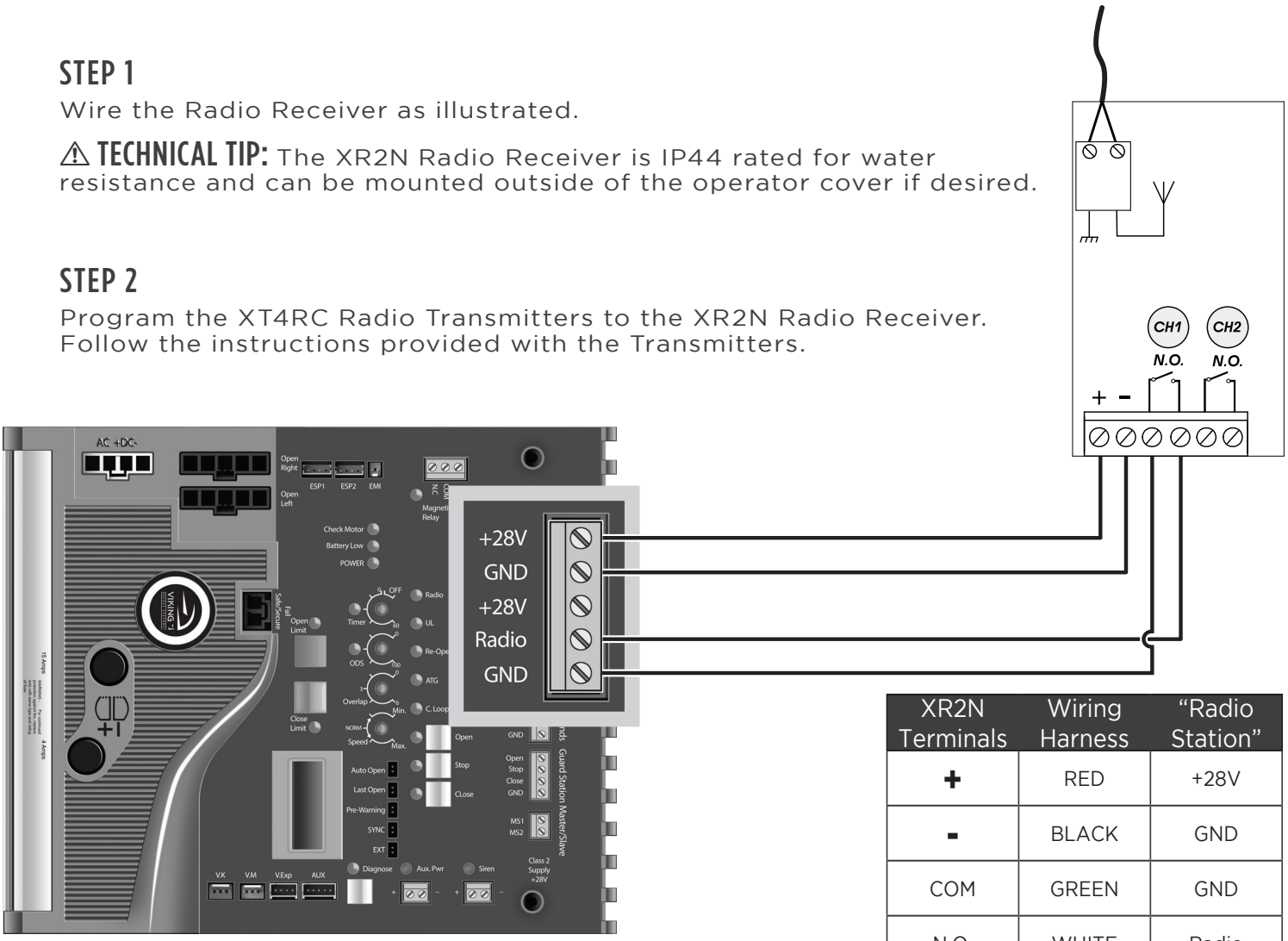

XR2N Terminals	Wiring Harness	"Radio Station"
+	RED	+28V
-	BLACK	GND
COM	GREEN	GND
N.O.	WHITE	Radio

⚠ **TECHNICAL TIP:** The Control Board provides two modes of operation that a radio receiver can control the gate. For more information regarding accessory connections and terminal functions, refer to pages 28-29.

1. Open-Stop-Close

By having the radio receiver connected as illustrated and with the "Timer" OFF:

This type of configuration is not recommended for commercial installations.

2. Open Only

By having the radio receiver connected as illustrated and with the "Timer" ON.

Photocell

NOTE: The operator may be equipped with **XP30-10K** Photocell PN# 7871053. Refer to pages 6-7, 22 for UL 325 requirements.

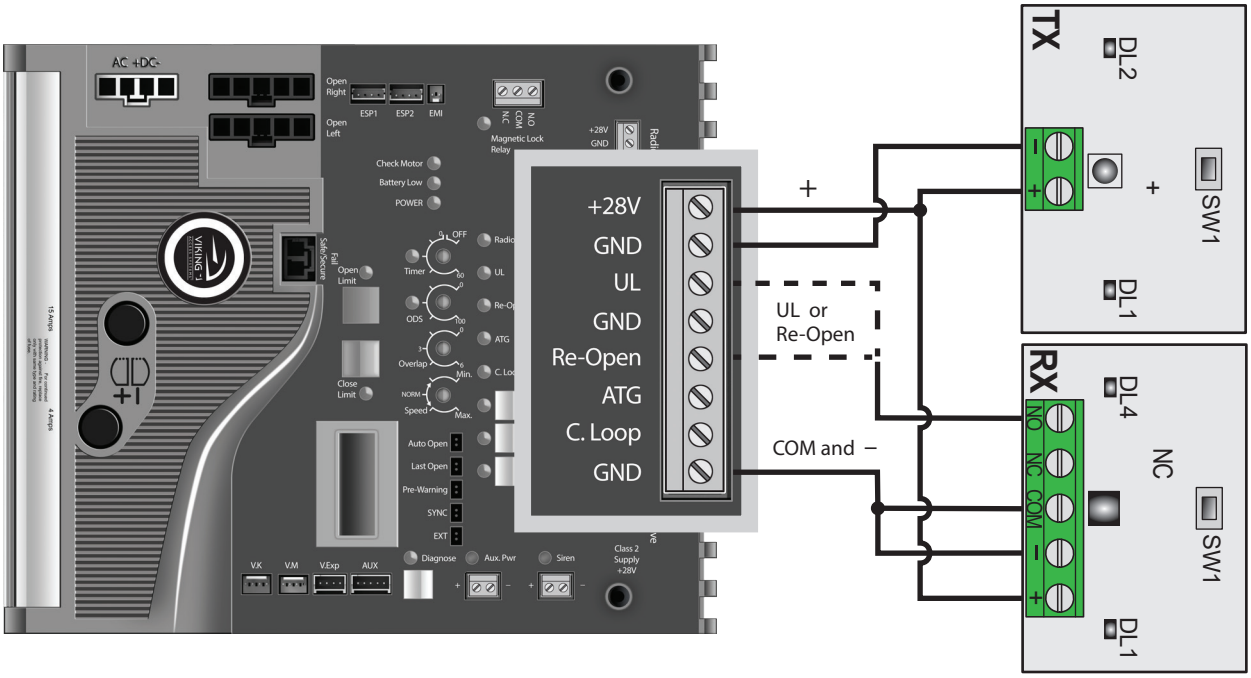

ACCESSORY CONNECTIONS

Viking Loop Rack

TIP: This operator may be equipped with a pre-wired **Loop Rack** that plug-in type loop detectors can be connected to. This provides a convenient alternative to the box type loop detectors that would need to be wired to the Control Board.

Loop Rack: Part # VA-LR
Loop Rack Wiring Harness: Part # LRHA

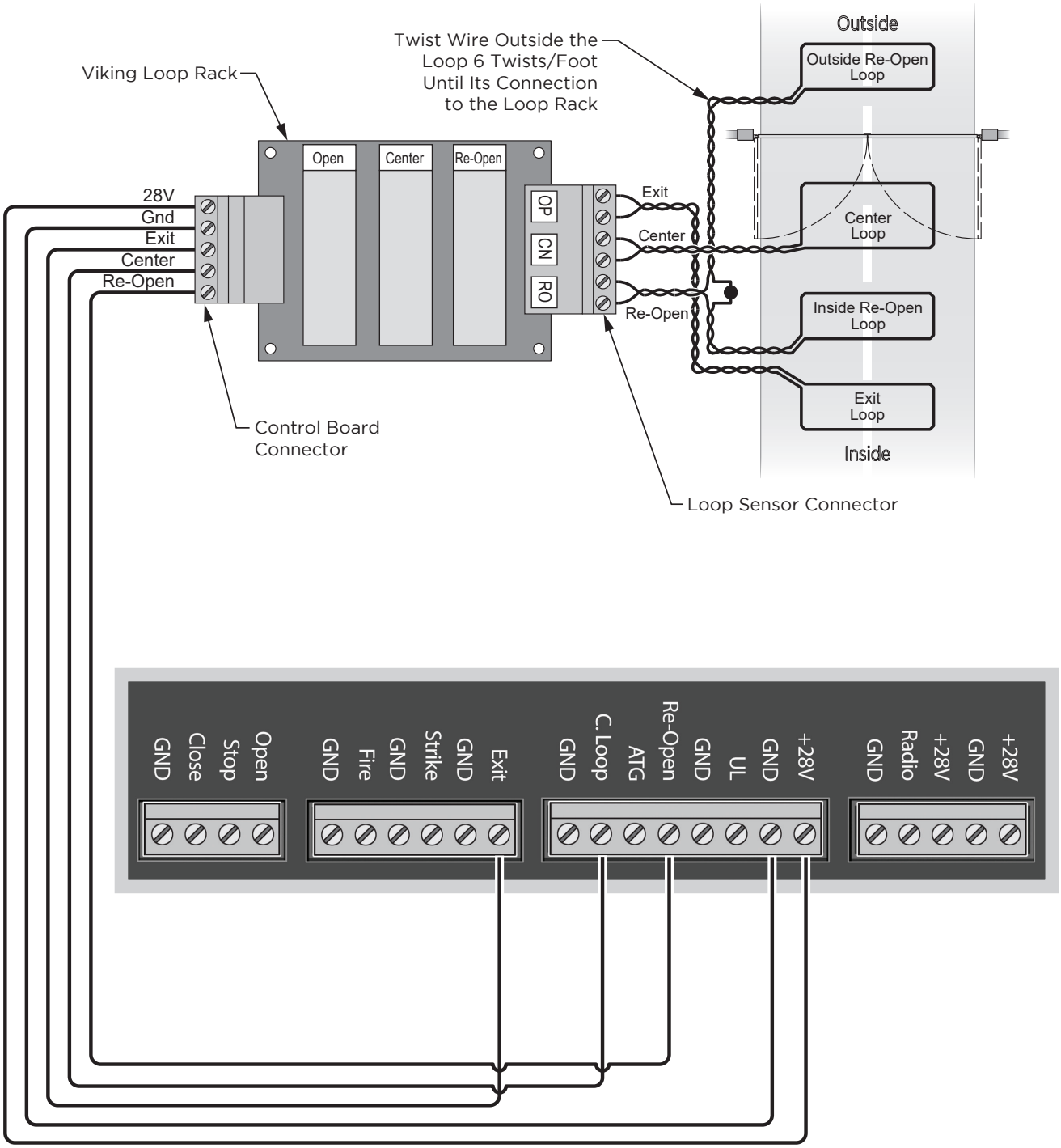

Guidelines for Loop Installation

1. Prevent sharp corners in the geometry of the loop sensor.
2. Install the appropriate number of turns for your loop geometry based on the loop perimeter. Use the Table below as a guide.
3. Use XLP (cross-linked-polyethylene) type of wire. This wire reduces the effects of moisture and other environmental events in altering the functionality of the vehicular loop detector.
4. Twist the lead wire at least 6 turns per foot.
5. Use BACKER-ROD to minimize damage to the loop detector wire prior to using the sealant.
6. Place the loop detector wire and adjust the sensitivity of the vehicular loop detector unit as needed.

⚠ **IMPORTANT!** Some of the following parameters may affect the proper functionality of the vehicular loop detector.
Consult the manufacturer of the vehicular loop detector and/or loop wire.

- Gate size
- Number of turns in the loop sensor wire
- Distance of the loop sensor wire to the gate

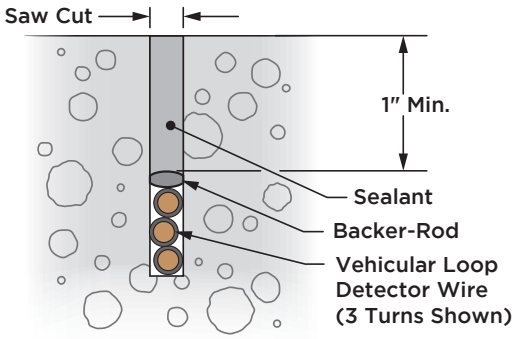

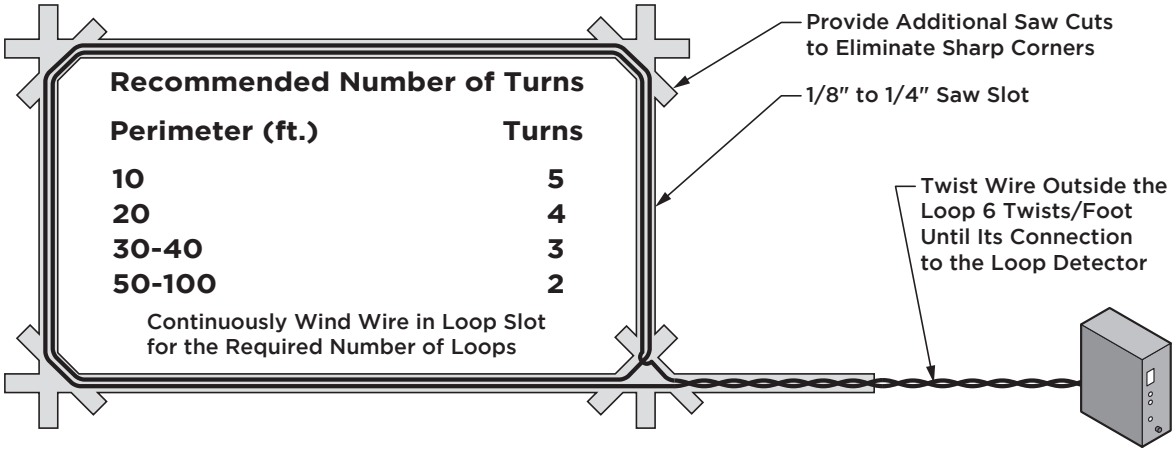

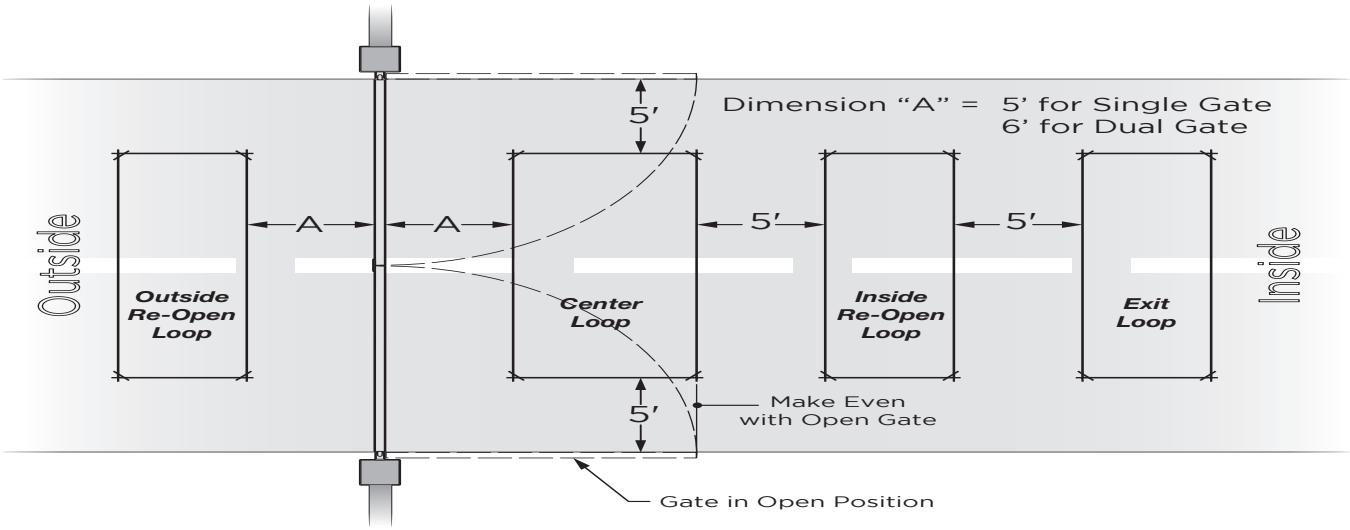

ACCESSORY CONNECTIONS

Magnetic Lock, Lock Solenoid

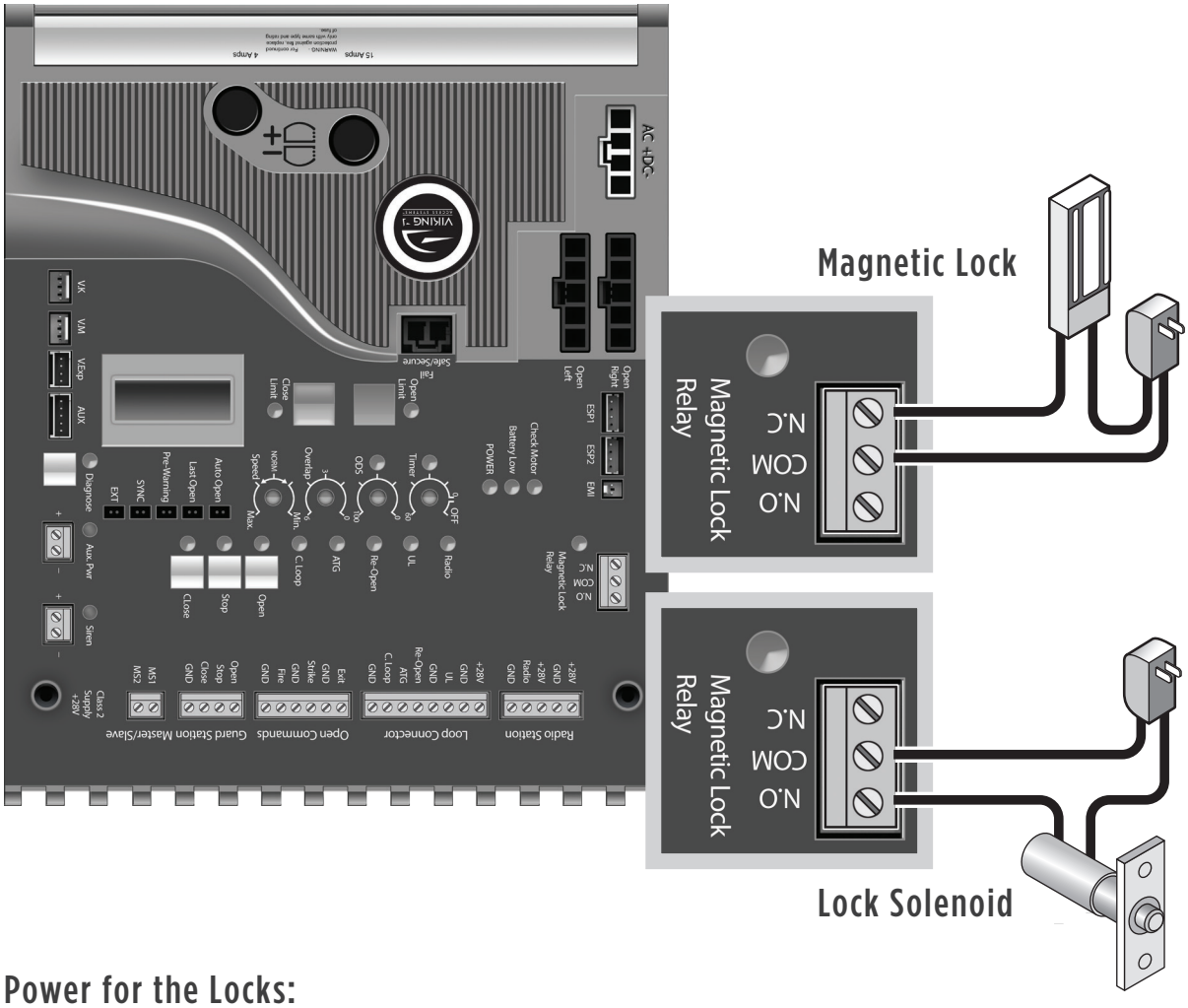

Power for the Locks:

Do not use the 24VDC power supplied by the Control Board. A Class 2 external power supply or plug-in transformer must be used for the magnetic lock or lock solenoid. This will prevent rapid drainage of the battery in the event of power failure.

The control boards "Magnetic Lock" relay is rated for 10A-250VAC.

⚠ **TECHNICAL TIP:** The Magnetic Lock Relay LED will indicate status of the on-board relay even if a lock is not connected to the Control Board. Refer to page 36.

Barrier Arm Synchronization

NOTE: The Control Board provides a convenient solution for applications that require synchronized operation with a Barrier Arm Operator. Consult the Barrier Arm operator's documentation for further instructions.

This type of application opens and closes in the following pattern:

1. Open Command is provided only to the Barrier Arm operator.
2. The Barrier Arm will send an open input to the Viking gate operator; Barrier Arm will delay to open until the Viking gate operator reaches its Open Limit.
3. Barrier Arm will close first; the Viking gate operator will delay to close until the Barrier Arm reaches its Close Limit. Turn the "Timer" on at the Viking Control Board.

STEP 1 (Figure A)

At the Barrier Arm operator, connect the device(s) that will be used as the primary OPEN input.

STEP 2

Connect the Barrier Arms' designated sync output terminals to the Strike input at the Viking gate operator.

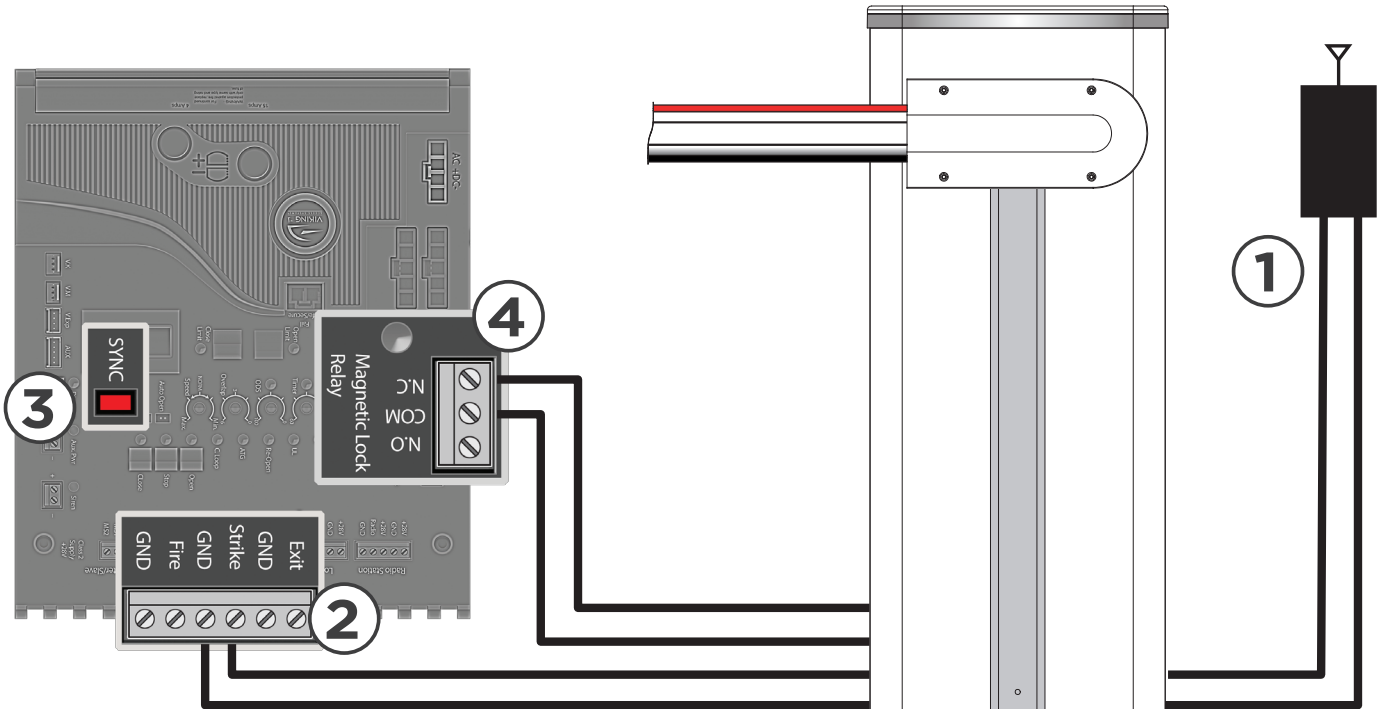

STEP 3

At the Viking gate operator, activate Sync Mode by placing a jumper on to the pin headers labeled "SYNC".

STEP 4

Connect Magnetic Lock relay terminals ("COM" and "N.C.") to the Barrier Arms' designated sync input terminals.

TROUBLESHOOTING – STANDARD ECU

LED References

In addition to the LCD Display, the Control Board LEDs monitor the various circuits of the Control Board. Use the table below to identify the corresponding "TS Ref#". Refer to pages 36-41 for further troubleshooting.

SLAVE MODULE (pg. 37)

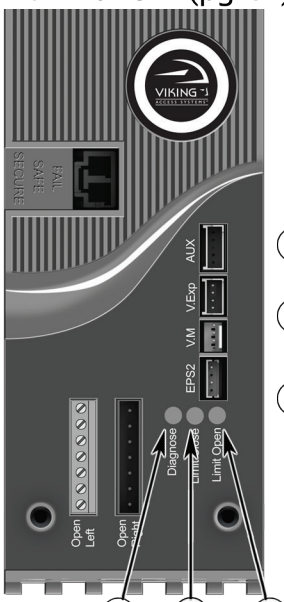

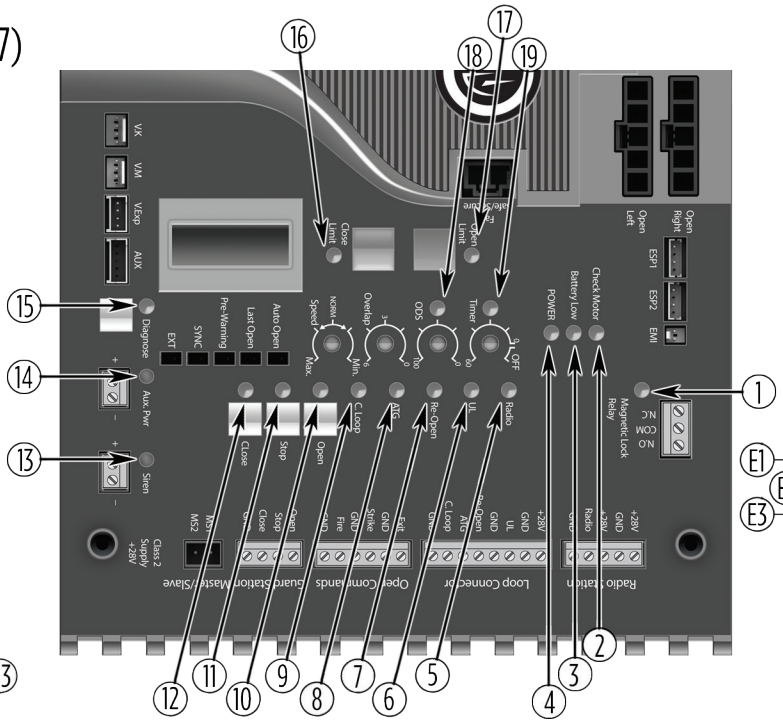

EMI BOARD (pg. 37)

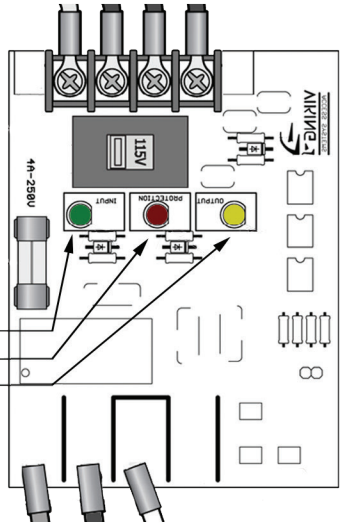

#	LED	Status	Meaning	Page 41 TS Ref #s
1	"Magnetic Lock Relay"	OFF	At Closed Limit and Magnetic Lock Relay state is closed across "COM" & "N.C.". (pg 34). Gate should be at the Close Limit.	
		SOLID	Not at Closed Limit and Magnetic Lock Relay state is closed across "COM" & "N.O.". (pg 34). Gate should not be at the Close Limit.	
2	"Check Motor"	OFF	Normal Condition.	
		SOLID	The Control Board is sending power to the motor but the circuit is open.	7, 8
3	"Battery Low"	OFF	Normal Condition.	
		SOLID	Batteries are low. Check power supply to the operator. (pg 18-19)	1, 2, 3, 4
		FLASHING	Batteries critically low. Check power supply to the operator. (pg 18-19)	1, 2, 3, 4
4	"POWER"	SOLID	Normal Condition.	
		FLASHING	Operator is running on batteries only. (pg 18-19)	1, 2, 4
		OFF	No power to Control Board.	1, 2, 4, 5
5	"Radio"	OFF	Normal Condition.	
		SOLID	Control Board is receiving an input from a device connected to the Radio terminal. (pg 28-30)	9, 10
6	"UL"	OFF	Normal Condition.	
		SOLID	Control Board is receiving an input from a device connected to the UL terminal or when more than one device is connected (pg 6-7, 22, 28).	9, 10, 16, 20
7	"Re-Open"	OFF	Normal Condition.	
		SOLID	Control Board is receiving an input from a device connected to the Re-Open terminal or when more than one device is connected (pg 6-7, 22, 28, 32).	9, 10, 16, 20
8	"ATG"	OFF	Normal Condition.	
		SOLID	Control Board is receiving an input from a device connected to the ATG terminal. (pg 28)	9, 10

TROUBLESHOOTING - STANDARD ECU

Page 41

#	LED	Status	Meaning	TS Ref#(s)
9	"C Loop"	OFF	Normal Condition.	
		SOLID	An input from a device connected to the C Loop terminal. (pg 28, 32)	9, 10
10	"Open"	OFF	Normal Condition.	
		SOLID	An input from a device to Exit, Fire, Strike or Open terminal. (pg 28, 32)	9, 10
11	"STOP"	OFF	Normal Condition.	
		SOLID	Control Board is receiving an input from a device connected to the Stop terminal (pg 28)	9, 10
			There is a problem with the required monitored sensor(s) connected to the "UL" and/or "Re-Open" input terminals (pg 6-7, 22)	16, 20
12	"Close"	OFF	Normal Condition.	
		SOLID	An input from a device connected to the Close terminal. (pg 28)	9, 10
13	"Siren"	OFF	Normal Condition.	
		SOLID	Second consecutive obstruction has been detected. (pg 24, 26)	1, 2, 11, 13
		FLASHING	Batteries are critically low.	1, 2, 4
14	"Aux. Pwr"	OFF	No voltage output on these terminals at the moment.(pg 19, 25)	
		SOLID	There is 24V DC output on these terminals at the moment. (pg 19, 25)	
15	"Diagnose" (Primary)	OFF	Normal Condition	
		FLASHING	Errors have been detected; Check LCD Display for ERR messages. (pg 40)	
16	"Close Limit" (Primary)	OFF	Gate is not at the close limit position.	6, 22
		SOLID	Gate is at the close limit position.	21, 22
		FLASHING	Indicates a problem with the limit switches or wires.	6, 16
17	"Open Limit" (Primary)	OFF	Gate is not at the open limit position.	6, 22
		SOLID	Gate is at the open limit position.	21, 22
		FLASHING	Indicates a problem with the limit switches or wires.	6,. 16
18	"ODS"	OFF	Normal Condition.	
		SOLID	Obstruction event has been detected on the Primary motor. (pg 24, 26)	1, 2, 11-13
		FLASHING	Overload event has been detected on the Primary motor. (pg 24, 26)	1, 2, 12, 13
19	"Timer"	OFF	If gate is at the open limit, the Timer to close is turned OFF. (pg 24)	
		SOLID	Timer to close is ON and counting down to close the gate. (pg 24)	
		FLASHING	Timer is ON but is not timing out due to a conflicting command. (pg 24)	9, 10
S1	"Diagnose" (Secondary)	OFF	Normal Condition	
		FLASHING	Errors have been detected; Check LCD Display for ERR messages. (pg 40)	
		SOLID	Obstruction event has been detected on the Secondary motor. (pg 24, 26)	1, 2, 11-13
		RAPID FLASH	Overload event has been detected on the Secondary motor. (pg 24, 26)	1, 2, 12, 13
S2	"Limit Close" (Secondary)	OFF	Secondary gate is not at the close limit position.	6, 22
		SOLID	Secondary gate is at the close limit position.	21, 22
S3	"Limit Open" (Secondary)	OFF	Secondary gate is not at the open limit position.	6, 22
		SOLID	Secondary gate is at the open limit position.	21, 22
E1	"AC VOLTAGE INPUT"	SOLID	Normal Condition.	
		OFF	Incoming power to the EMI Board is not sufficient..(pg 18)	1
E2	"PROTECTION WORKING"	SOLID	Normal Condition.	
		OFF	EMI Board is damaged and circuit is not protected . Replace EMI Board.	
E3	"AC VOLTAGE OUTPUT"	SOLID	Normal Condition.	
		OFF	There is no output voltage from the EMI Board.	2

TROUBLESHOOTING – STANDARD ECU

LCD Display References

The Control Board is equipped with a LCD Display that provides operator information, current conditions, settings, diagnostics and error messages. Use the table below to identify the corresponding "TS Ref#". Refer to pages 36-41 for further troubleshooting.

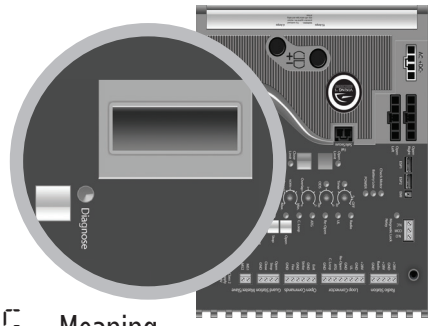

Press the Diagnose button to manually scroll through all of the Messages.

NOTE: Error Messages will be displayed first.

The "Diagnose" LED will flash consecutively indicating how many Error Messages are available.

LCD MSG	Meaning	Page 41 TS Ref #s
MODEL G5	Indicates the Model of the unit. G-5	6
	System Status Messages	
GATE IS IDLE	Gate is stopped between limits.	
GATE IS OPENING	Gate is opening.	
GATE IS CLOSING	Gate is closing.	
GATE IS OPENED	Gate is at the limit open position.	
GATE IS CLOSED	Gate is at the limit close position.	
STOP BY OBSTRUCT	Primary or Single motor has stopped due to an obstruction of the gate system. Also refer to the "ODS" LED. (pg 24, 26, 36 @ #4, 37 @ #18)	11, 12, 13
STOP BY OVERLOAD	Primary or Single motor has stopped due to an overload of the gate system. Also refer to the "ODS" LED. (pg 24, 26, 36 @ #4, 37 @ #18)	11, 12
OVERLAP TIMING	Gate is waiting for the overlap time.	
HOLDING __ SEC	Gate is at the limit open position and timing to close - The display shows the actual time left before closing.	10
STOP BY ODS S	Secondary motor has stopped due to an obstruction sensor event. Also refer to the "DIAGNOSE" LED on the Secondary Module. (pg 24, 26, 36 @ #4, 37 @ #S1)	11, 12, 13
RED CONN UNPLUGED	The Motor Connector is not plugged into the red Open Left or Open Right socket at the Control Board. (pg 20)	21

TROUBLESHOOTING - STANDARD ECU

LCD Display References

LCD MSG	Meaning	Page 41 TS Ref #s
	Multi Meter Displays	
MOT AMP _ _ . _ A	This is the motor current amperage during operation. At Idle, should be 0.0 A.	
MOT VOLT _ _ . _ VDC	This is the actual motor voltage during operation. At Idle, should be 0.0 VDC.	
AC VOLT _ _ . _ VAC	This is the actual low voltage AC to the Control Board from the transformer.	
CHARGE _ _ . _ VDC	Indicates the charging voltage to the batteries, With the Battery Switch in the OFF position, should be between 26.0 - 28.0 VDC.	
BAT VOLT _ _ . _ VDC	Indicates battery voltage, if the AC power is discontinued to the Control Board.	
	Board Settings Messages	
SPEED _ _ %	Shows the percentage of speed set by the Speed adjustment on the Control Board. (pg 24)	
OVERLAP _ _ SEC	Shows the number of seconds set by the Overlap Adjustment on the Control Board. (pg 24)	
ODS SENS _ _ _ %	Shows the force setting selected to trip the obstruction sensor. (pg 24, 26)	
TIMER _ _ SEC	Shows the amount time set or remaining to hold the gate at the Open Limit position, before the gate starts to close. (pg 24)	
HEATER _ _ OFF	The Integrated Heater is disabled for the open "OPN" and/or close "CLS" limits (pg 27)	
HEATER _ _ ON	The Integrated Heater has been enabled to turn on at the open "OPN" and/or close "CLS" limits (pg 27) "ACTV" will also be displayed while it is heating.	
UL LEARN UL_ RO_	Indicates the number of connected Monitored Entrapment Protection Sensors that are being monitored. NO LEARN = no sensors learned. (pg 6-7, 22)	20

TROUBLESHOOTING – STANDARD ECU

LCD Display References

LCD MSG	Meaning	Page 41 TS Ref #s
	Error Messages	
ERR AC LOW	Indicates that the 24VAC supply to the VFlex Board is too low from the 115/230 power supply.	1, 3, 19
ERR AC HIGH	Indicates that the 24VAC supply to the VFlex Board is too high from the 115/230 power supply.	1, 3, 19
ERR AC NO AC	Indicates that there is no 24VAC supply detected to the VFlex Board from the 115/230 power supply.	1, 2, 4, 19
ERR CHRG HIGH	Potential problem with the charging voltage from the Control Board.	1, ?
ERR CHRG CHECK 4A	a) 4 Amp Fuse is blown, or; b) There is a problem with the batteries or the Control Board.	18, ?
ERR BAT LOW	The voltage from the batteries is low.	1-4, 18, 19
ERR FUSE 15 AMP	15 Amp motor fuse is blown on the Primary or Single Control Board.	7, 11, 12
ERR EMI NO EMI	No EMI board detected.	15
ERR EMI NO FUSE	4 Amp main fuse is blown on EMI Board.	2
ERR EMI NO AC	There is no AC voltage detected to or at the EMI Board.	1, 4
ERR EMI UNKNOWN	There is a problem with the communication between the EMI Board and the VFlex Board.	15
ERR EMI PROTECT	Lightning strike protection at the EMI Board has been damaged.	?
ERR FUSE 15A S	15 Amp motor fuse is blown on the Secondary Module.	7, 11, 12
ERR REFV WRONG	One, or more, of the internal reference voltages are incorrect.	?
ERR SENS UL RO	There is a problem with the required monitored sensor(s) connected to the “UL” and/or “Re-Open” input terminals (pg 6-7, 22).	20
ERRLIMIT OPN+CLS	There is a problem with the Limit Switches or Wires.	22

TROUBLESHOOTING - STANDARD ECU

Solutions

Begin the troubleshooting process by referring to the error messages on the LCD Display and/or the Status LEDs on the Control Board. Use pages 36-40 to identify the Troubleshooting Reference # (TS Ref#) then reference the table below.

TS Ref#	CHECK	Page Ref#
1	Check that the high voltage power supplied to “EMI Board” is within range. 100V-120V or 200V-240V.	pg 18-19
2	Remove and check EMI Fuse for continuity.	pg 18-19
3	Check that the “Voltage Selector”, on the EMI Board, is set according to the high voltage power supply. 115VAC or 230VAC.	pg 18-19
4	Check the main power breaker and “AC POWER” switch (if applicable) are on.	pg 18-19
5	Check that the Power Harness is connected to the Control Board.	pg 11, 18-19
6	Perform a soft reset by momentarily actuating both limit switches simultaneously. Check that the Motor Harness is wired correctly to the Motor Connector	pg 20, 21
7	Check Motor Fuse on the Control Board.	pg 11
8	Check for an open circuit to the motor and that the operator is not in Manual Release mode. NOTE this ERR may also occur due to gate inertia.	pg 7
9	Check the Status LEDs and LCD Display to determine if the Control Board is receiving an input from any external devices or if the “ODS” has been triggered.	pg 24, 26 36-38
10	Remove the external devices from the Control Board to determine if the Control Board is responding to an input or problem with the external device or wiring.	pg 28-32, 35, 36-37
11	Check the “ODS” setting on the Control Board.	pg 4, 24, 26
12	Check that the gate can be moved manually with low resistance throughout its full length of travel. Check gate track rollers, chain and hinges as applicable.	pg 4, 7
13	Check the limit position.	pg 11, 16
14	Not applicable to this model.	
15	Check the EMI Cable and contacts between the EMI Board and the VFlex Board.	pg 11, 18
16	Check the LCD Display for Error Messages.	pg 40
17	Not applicable to this model.	
18	Check 4 Amp fuse on the Control Board.	pg 11
19	Check for 24VAC out from the Toroidal Transformer and Power Harness.	pg 11, 18
20	Check the required entrapment protection sensors. Execute the UL Learn Sensor process.	pg 3, 6-7, 22
21	Check that the Motor Harness and Connector is connected to the Control Board.	pg 11, 20
22	Check the Limit Switches and Wires. Both limit circuits are to be N.C.	pg 16, 20-21
23	Not applicable to this model.	
?	Call Viking Technical Support for further assistance.	

Appendix (A) - SOLAR ECU

⚠ **IMPORTANT:** The following pages (42-51) refer ONLY to the Viking Solar ECU.

SPECIFICATIONS/RATINGS	
Main Power Source	**Solar 12V**
Solar Wattage Maximum	40W
Solar Voltage Nominal	**12V**
Solar Voltage Maximum	29V
Battery Voltage Nominal	**12V**
Battery Capacity Maximum	35Ah
Battery Voltage Minimum	8V
Charger Load Current	3.0A
Output Voltage	24VDC
Accessory Current Maximum	750mA
Power Consumption Single - Sleep	19mA
Power Consumption Dual - Sleep	23mA
Operating Temperature	-4°F (-20°C) to 160°F (71°C)

The Solar ECU can be Identified by the following features:

- Yellow Control Board Cover
- Built-in Solar Charge Regulator
- "Solar Volt" menu on LCD Display

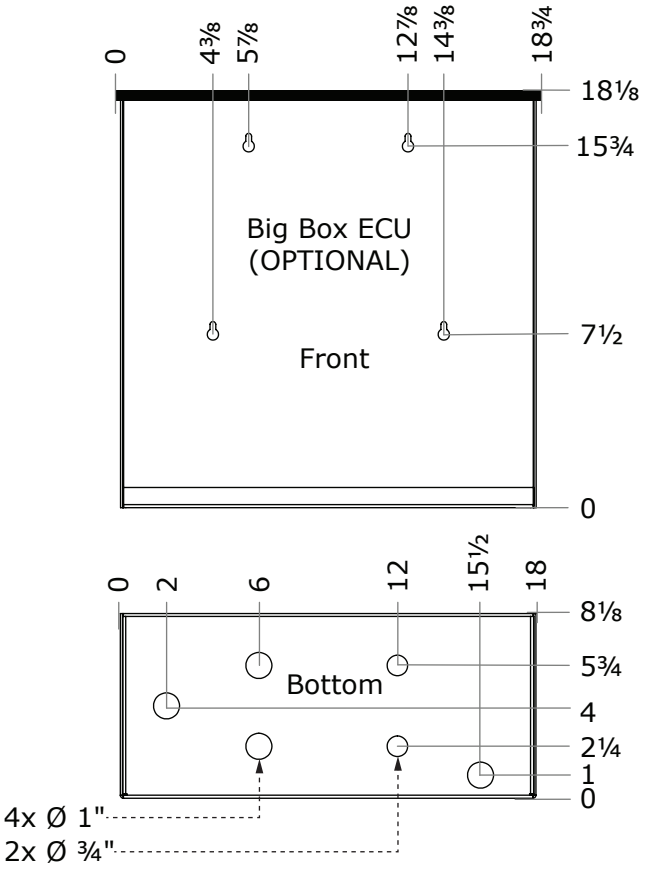

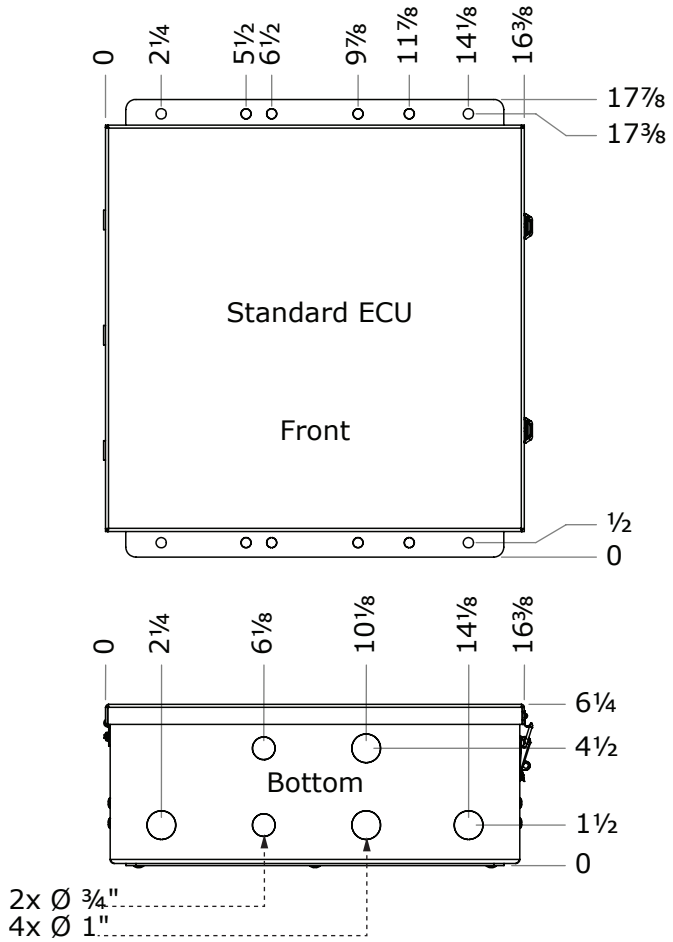

ELECTRICAL INSTALLATION - SOLAR ECU

SAVE THESE INSTRUCTIONS - This manual contains important instructions for the ECUs model gate operator that shall be followed during installation and maintenance of the charge controller.

Battery Selection

- Battery is sold separately.
- Use only UL recognized 12V Sealed Lead Acid (SLA)
- 35Ah Maximum battery capacity.

Battery Care and Location

- Use at least 12AWG wire, rated 90°C or better.
- Two 18Ah batteries can be stored within the ECU as illustrated, and wired in parallel to maintain 12 volts.
- Ensure the battery terminals will maintain a 1/4" spacing from all other circuits and metal parts.
- Do not dispose of the battery in fire. The cells may explode. Check with local codes for possible disposal instructions.
- Do not open or mutilate the battery. Released electrolyte is corrosive and may cause damage to the eyes or skin. It may be toxic if swallowed.
- Exercise care in handling batteries in order not to short the battery with conducting materials such as rings, bracelets and keys.
- CAUTION - A battery can present a risk of electrical shock, burn from high short circuit current, fire or explosion from vented gasses. Observe proper precautions.
- Observe proper polarity orientation between the battery and charging circuit.

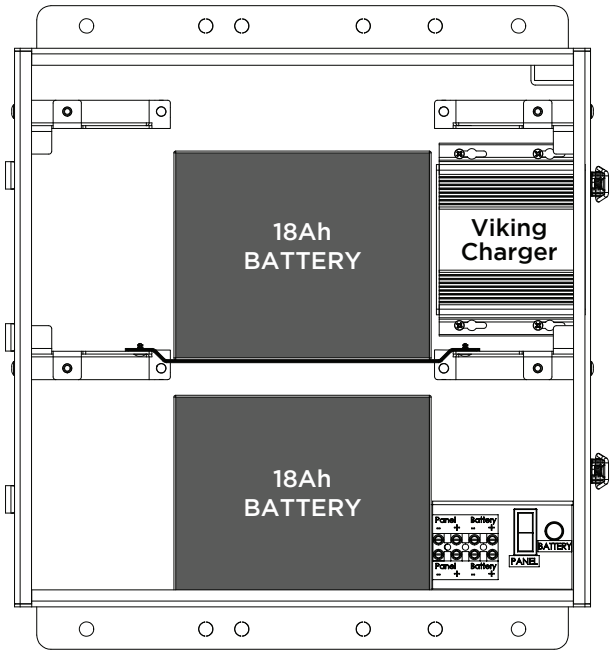

Solar Panel Selection

- Solar panel(s) are sold separately.
- Use only UL Listed 12V solar panel(s), such as Viking part #:

Wattage	Viking Part#	Open-Circuit Voltage	Short-Circuit Current
40 Watts	VA-SO40W	21.8V	2.57A

⚠ **Important:** The number of cycles achieved daily is dependent on many factors, including current draw of the motor and accessories, and local solar radiation data. **If more specific information is needed please consult with Viking Access Systems. For more information regarding solar energy refer to:** *http://rredc.nrel.gov/solar/pubs/redbook/*

ELECTRICAL INSTALLATION – SOLAR ECU

Solar Panel Care and Location

- Where it will receive maximum sunlight throughout the year.
- Avoid trees and buildings or obstructions, which could cast shadows on the panel.
- South facing and tilted at an inclined angle that is equal to latitude.
- If dirt build-up becomes excessive, clean the glass with a soft cloth using a mild detergent and water.
- Install solar panels in the following conditions:
  - Operating temperature: -40°F to 185°F
  - Humidity: Below 85RH%
  - Wind pressure: Below 50.12lb / ft² (2400Pa)
  - Snow load pressure: Below 112.76lb / ft² (5400Pa)
- DO NOT install the solar panel near open flames or flammable materials.
- DO NOT install the solar panel where there is a risk of being immersed in water or continually exposed to water from a sprinkle, fountain, etc..

Solar Panel Safety Precautions

⚠ Installation must be performed by a qualified technician.

- Before installing your system, contact local authorities and determine the necessary permit, installation and inspection requirements.
- Follow all local codes and guidelines.
- To reduce the risk of electrical shock or burns, the solar panel must be covered with an opaque material during installation.
- Do not touch live terminals with bare hands as they can present a risk of electrical shock, burn or fire.

Solar Panel Installation (per article 690 of ANSI/NFPA 70)

- Use appropriate methods to mount the solar panel. Fall of the panel from high places will cause death, injury or damage.
- The solar panel must be mounted on a post with a supporting structure to support wind and snow loads rated for use by the appropriate local or civil codes.
- Use stainless steel washers between the panel and the supporting frame to prevent electrolysis corrosion.
- Use conduit and the appropriate wire type for outdoor applications.
- Properly ground solar panel and operator according to NEC code.
- Use the appropriate wire size according to distance and the maximum power (Watt) rating of the solar panel, or panels combined.
- Use at least 16 AWG photovoltaic cable or 90°C, sunlight and moisture resistant direct burial cable or better.
- WARNING - This charge controller must be used with an external GFDI device as required by article 690 of the National Electric Code for the installation location.

Tips for proper ground installation:

To minimize the effects caused by lightning, follow these guidelines:

- Use a ground rod to provide a ground reference.
- Consult your city code and be aware of underground services in the site of the gate operator to prevent inconveniences.
- All ground wires must be as short and as thick as possible.
- Always use a single bonding point for grounding.
- Connect the ground wire to the Control Board mounting plate.
- Prevent unnecessary turns or loops in all ground wires.

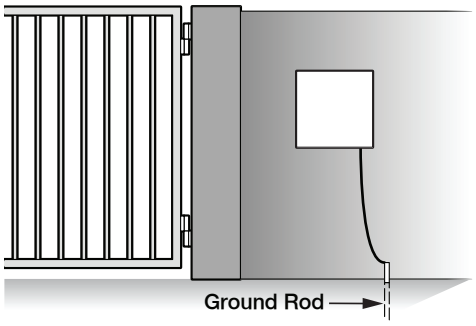

ELECTRICAL INSTALLATION - SOLAR ECU

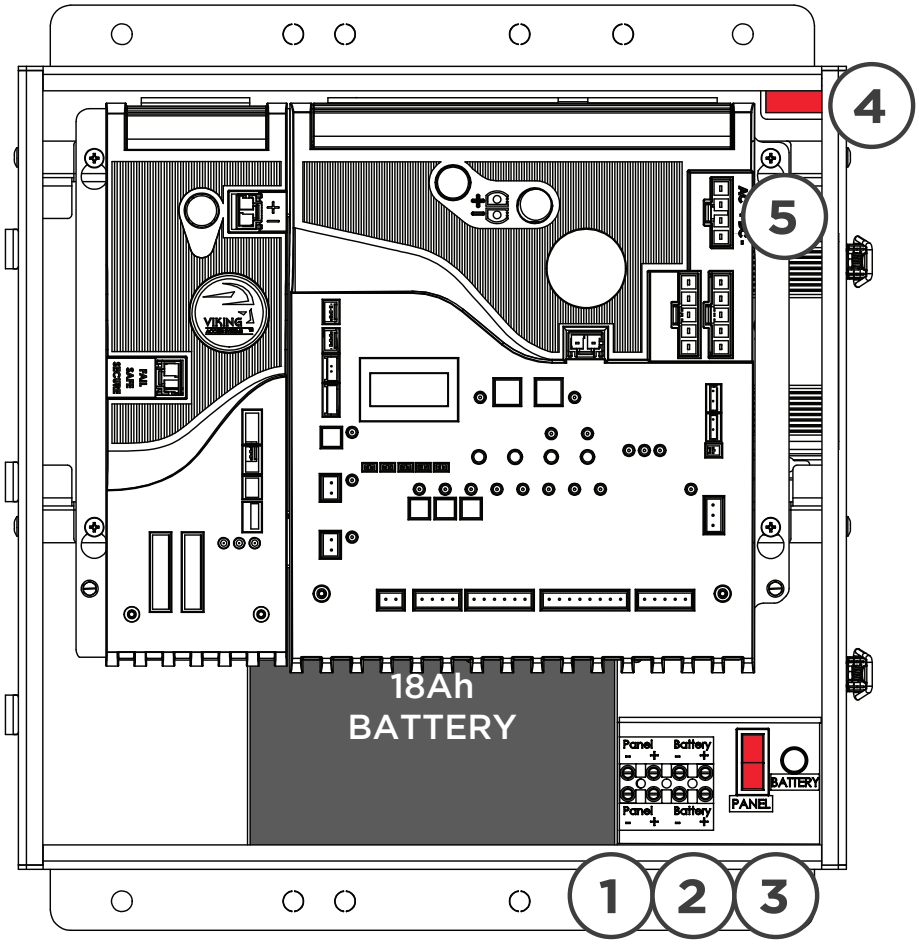

Solar Power Connections

⚠ Caution: Ensure correct polarity

Step 1: Connect the 12V Solar Panel to the terminals labeled "PANEL".

Step 2: Connect the 12V Battery(ies) to the terminals labeled "Battery". Batteries must be connected in parallel for a combined total 12V supply.

Step 3: Turn the "PANEL" switch to the "RESET" position.

Step 4: Turn the "POWER" Switch to the "RESET" position.

Step 5: Connect the Power Harness and verify the "POWER" LED is illuminated solid.

⚠ Power Saving Tip

The Solar VFlex Control Board shuts down power at the "Aux. Pwr" Terminal when the board is in sleep mode.

To save energy, get the power for your non-essential devices (such as photo beams) from this terminal.

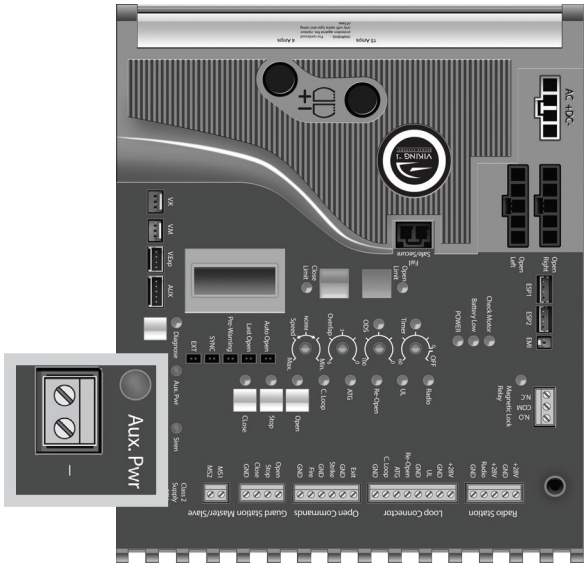

TROUBLESHOOTING – SOLAR ECU

LED References

In addition to the LCD Display, the Control Board LEDs monitor the various circuits of the Control Board. Use the table below to identify the corresponding "TS Ref#" and refer to pages 46-51 for further troubleshooting.

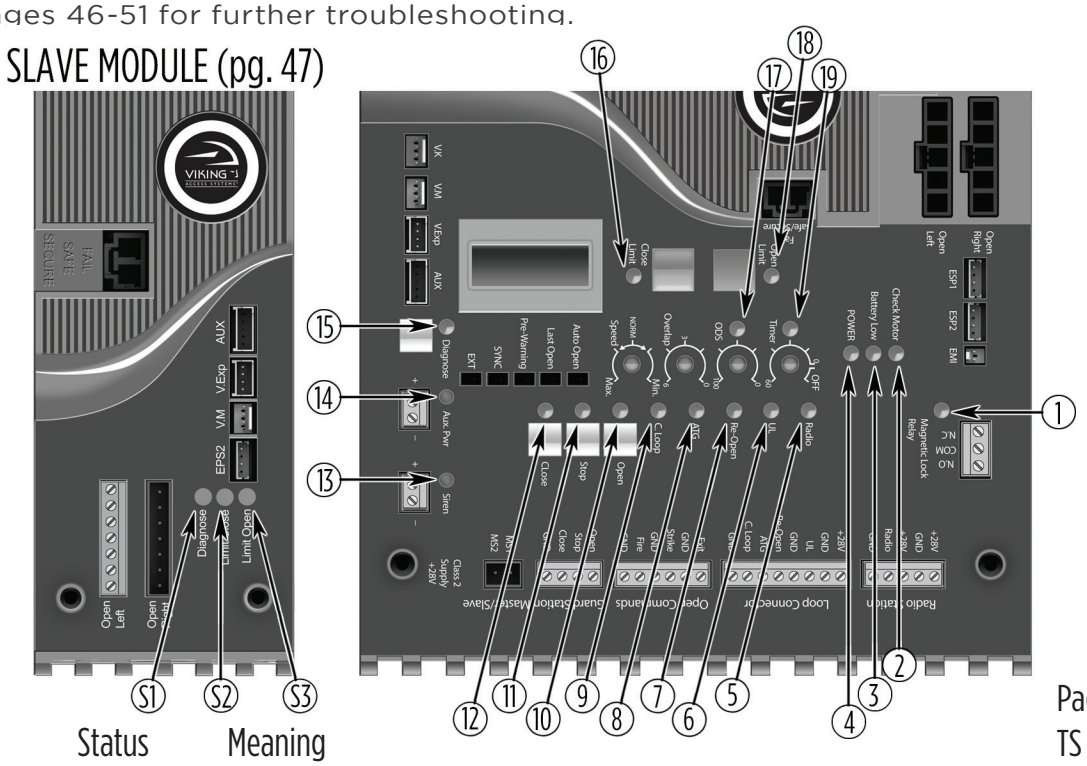

Page 51

#	LED	Status	Meaning	TS Ref#(s)
1	"Magnetic Lock Relay"	OFF	At Closed Limit and Magnetic Lock Relay state is closed across "COM" & "N.C.". (pg 34). Gate should be at the Close Limit.	
		SOLID	Not at Closed Limit and Magnetic Lock Relay state is closed across "COM" & "N.O.". (pg 34). Gate should not be at the Close Limit.	
2	"Check Motor"	OFF	Normal Condition.	
		SOLID	The Control Board is sending power to the motor but the circuit is open.	7, 8
3	"Battery Low"	OFF	Normal Condition.	
		SOLID	Does not apply to Solar Units.	6
		FLASHING	Batteries critically low. Check power supply to the operator. (pg 19)	1, 2, 3
4	"POWER"	OFF	No power to Control Board (pg 45)	1, 2, 3
			Or the board is in "Sleep Mode" (pg 49). This is normal after being at idle for 20 seconds. Press any of the white buttons to wake up the board.	
		SOLID	Normal Condition.	
		FLASHING	Does not apply to Solar Units.	6
5	"Radio"	OFF	Normal Condition.	
		SOLID	Control Board is receiving an input from a device connected to the Radio terminal. (pg 28-30)	9, 10
6	"UL"	OFF	Normal Condition.	
		SOLID	Control Board is receiving an input from a device connected to the UL terminal or when more than one device is connected (pg 6-7, 22, 28).	9, 10, 16, 20
7	"Re-Open"	OFF	Normal Condition.	
		SOLID	Control Board is receiving an input from a device connected to the Re-Open terminal or when more than one device is connected (pg 6-7, 22, 28, 32).	9, 10, 16, 20
8	"ATG"	OFF	Normal Condition.	
		SOLID	Control Board is receiving an input from a device connected to the ATG terminal. (pg 28)	9, 10

TROUBLESHOOTING - SOLAR ECU

#	LED	Status	Meaning	Page 41 TS Ref#(s)
9	"C Loop"	OFF	Normal Condition.	
		SOLID	An input from a device connected to the C Loop terminal. (pg 28, 32)	9, 10
10	"Open"	OFF	Normal Condition.	
		SOLID	An input from a device to Exit, Fire, Strike or Open terminal. (pg 28, 32)	9, 10
11	"STOP"	OFF	Normal Condition.	
		SOLID	Control Board is receiving an input from a device connected to the Stop terminal (pg 28)	9, 10
			There is a problem with the required monitored sensor(s) connected to the "UL" and/or "Re-Open" input terminals (pg 6-7, 22)	16, 20
12	"Close"	OFF	Normal Condition.	
		SOLID	An input from a device connected to the Close terminal. (pg 28)	9, 10
13	"Siren"	OFF	Normal Condition.	
		SOLID	Second consecutive obstruction has been detected. (pg 24, 26)	1, 2, 11, 13
		FLASHING	Batteries are critically low.	1, 2
14	"Aux. Pwr"	OFF	No voltage output on these terminals at the moment.(pg 19, 25)	
		SOLID	There is 24V DC output on these terminals at the moment. (pg 19, 25)	
15	"Diagnose" (Primary)	OFF	Normal Condition	
		FLASHING	Errors have been detected; Check LCD Display for ERR messages. (pg 40)	
16	"Close Limit" (Primary)	OFF	Gate is not at the close limit position.	6, 22
		SOLID	Gate is at the close limit position.	21, 22
		FLASHING	Indicates a problem with the limit switches or wires.	6, 16
17	"Open Limit" (Primary)	OFF	Gate is not at the open limit position.	6, 22
		SOLID	Gate is at the open limit position.	21, 22
		FLASHING	Indicates a problem with the limit switches or wires.	6,. 16
18	"ODS"	OFF	Normal Condition.	
		SOLID	Obstruction event has been detected on the Primary motor. (pg 24, 26)	1, 2, 11, 13
		FLASHING	Overload event has been detected on the Primary motor. (pg 24, 26)	1, 2, 11, 13
19	"Timer"	OFF	If gate is at the open limit, the Timer to close is turned OFF. (pg 24)	
		SOLID	Timer to close is ON and counting down to close the gate. (pg 24)	
		FLASHING	Timer is ON but is not timing out due to a conflicting command. (pg 24)	9, 10
S1	"Diagnose" (Secondary)	OFF	Normal Condition	
		FLASHING	Errors have been detected; Check LCD Display for ERR messages. (pg 40)	
		SOLID	Obstruction event has been detected on the Secondary motor. (pg 24, 26)	11, 13, 1, 2
		RAPID FLASH	Overload event has been detected on the Secondary motor. (pg 24, 26)	11, 13, 1, 2
S2	"Limit Close" (Secondary)	OFF	Secondary gate is not at the close limit position.	6, 22
		SOLID	Secondary gate is at the close limit position.	21, 22
S3	"Limit Open" (Secondary)	OFF	Secondary gate is not at the open limit position.	6, 22
		SOLID	Secondary gate is at the open limit position.	21, 22

TROUBLESHOOTING – SOLAR ECU

LCD Display References

The Control Board is equipped with a LCD Display that provides operator information, current conditions, settings, diagnostics and error messages. Use the table below to identify the corresponding "TS Ref#". Refer to pages 46-51 for further troubleshooting.

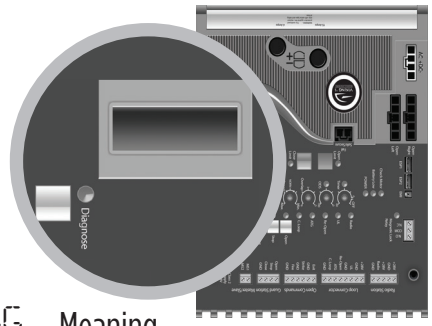

1. Error Messages will be displayed first.
2. The "Diagnose" LED will flash consecutively indicating how many Error Messages are available.
3. Press the Diagnose button to manually scroll through all of the Messages.

LCD MSG	Meaning	Page 51 TS Ref #
MODEL G55	Indicates the Model of the unit. G-5 Solar.	6
	System Status Messages	
GATE IS IDLE	Gate is stopped between limits.	
GATE IS OPENING	Gate is opening.	
GATE IS CLOSING	Gate is closing.	
GATE IS OPENED	Gate is at the limit open position.	
GATE IS CLOSED	Gate is at the limit close position.	
STOP BY OBSTRUCT	Primary or Single motor has stopped due to an obstruction of the gate system. Also refer to the "ODS" LED. (pg 24, 26, 46 @ #4, 47 @ #18)	11, 12, 13
STOP BY OVERLOAD	Primary or Single motor has stopped due to an overload of the gate system. Also refer to the "ODS" LED. (pg 24, 26, 46 @ #4, 47 @ #18)	11, 12
OVERLAP TIMING	Gate is waiting for the overlap time.	
HOLDING __ SEC	Gate is at the limit open position and timing to close - The display shows the actual time left before closing.	
STOP BY ODS S	Secondary motor has stopped due to an obstruction sensor event. Also refer to the "DIAGNOSE" LED on the Secondary Module. (pg 24, 26, 46 @ #4, 47 @ #S1)	11, 12, 13
UL LEARN UL_ RO_	Indicates the number of connected Monitored Entrapment Protection Sensors that are being monitored. NO LEARN = no sensors learned. (pg 6-7, 22)	
RED CONN UNPLUGED	The Motor Connector is not plugged into the red Open Left or Open Right socket at the Control Board. (pg 20)	21

LCD Display References

LCD MSG	Meaning	Page 51 TS Ref #
	Multi Meter Displays	
MOT AMP ___.__ A	This is the motor current amperage during operation.	
MOT VOLT ___.__ VDC	This is the actual motor voltage during operation.	
SOL VOLT ___.__ VDC	This is the actual voltage from the Solar Panel.	
CHARGE ___.__ VDC	Indicates the voltage being supplied to the Battery from the Viking Solar Charger.	
BAT VOLT ___.__ VDC	This is the actual voltage from the Battery	
	Board Settings Messages	
SPEED __ %	Shows the percentage of speed set by the Speed adjustment on the Control Board. (pg 24)	
OVERLAP __ SEC	Shows the number of seconds set by the Overlap Adjustment on the Control Board. (pg 24)	
OBS SENS ___%	Shows the force setting selected to trip the obstruction sensor. (pg 24, 26)	
TIMER __ SEC	Shows the amount time set or remaining to hold the gate at the Open Limit position, before the gate starts to close. (pg 24)	
LOCK MOD ___	The Lock Mode feature is turned ON or OFF (pg 27)	

TROUBLESHOOTING – SOLAR ECU

LCD Display References

LCD MSG	Meaning	Page 51 TS Ref #s
	Error Messages	
ER PANEL LOW	Indicates that the voltage being provided from the solar panel is too low.	1, ?
ER PANEL HIGH	Indicates that the voltage being provided from the solar panel is too High.	1, ?
ER SOLAR NO PANEL	Indicates that there is no voltage being provided from the solar panel.	1, ?
ERR CHRG HIGH	Indicates the Solar Panel voltage is high or potential problem with the Solar Charger.	1, 2, ?
ERR BAT LOW	The battery is low	1, 2, 3, ?
ERR FUSE 15 AMP	15 Amp motor fuse is blown on the Primary or Single Control Board.	7, 11, 12
ERR FUSE 15A S	15 Amp motor fuse is blown on the Secondary Module.	7, 11, 12
ERR REFV WRONG	One, or more, of the internal reference voltages are incorrect.	?
ERR SENS UL RO	There is a problem with the required monitored sensor(s) connected to the “UL” and/or “Re-Open” input terminals (pg 16, 20-21).	20
ERRLIMIT OPN+CLS	There is a problem with the Limit Switches or Wires.	22

Solutions

Begin the troubleshooting process by referring to the error messages on the LCD Display and/or the Status LEDs on the Control Board. Use pages 46-50 to identify the Troubleshooting Reference # (TS Ref#) then reference the table below.

TS Ref#	CHECK	Page Ref#
1	Check the voltage from the Solar Panel. Voltage is to be 12V - 18V	pg 45
2	Check the charging voltage from the Solar Charger with battery disconnected. Voltage is to be 13.5V	pg 45
3	Check the Battery voltage	pg 45
4	Not applicable to the Solar models.	
5	Check that the Power Switch is set to “Reset” position and the Power Harness is connected to the Control Board.	pg 45
6	Check that the operator model displayed on the LCD Display is correct. Check that the Motor Harness is wired correctly to the Motor Connector	pg 48 pg 20
7	Check the Motor Fuse on the Control Board.	pg 11
8	Check for an open circuit to the motor and that the operator is not in Manual Release mode. NOTE this ERR may also occur due to gate inertia.	pg 7
9	Check the Status LEDs and LCD Display to determine if the Control Board is receiving an input from any external devices or if the “ODS” has been triggered.	pg 24, 26 36-38
10	Remove the external devices from the Control Board to determine if the Control Board is responding to an input or problem with the external device or wiring.	pg 28-32, 35, 36-37
11	Check the “ODS” setting on the Control Board.	pg 4, 24, 26
12	Check that the gate can be moved manually with low resistance throughout its full length of travel. Check gate track rollers, chain and hinges as applicable.	pg 4, 7
13	Check the limit position.	pg 11, 16
14	Not applicable to this model.	
15	Not applicable to Solar models.	
16	Check the LCD Display for Error Messages.	pg 50
17	Not applicable to this model.	
18	Not applicable to the Solar models.	
19	Not applicable to the Solar models.	
20	Check the required entrapment protection sensors. Execute the UL Learn Sensor process.	pg 3, 6-7, 22
21	Check that the Motor Harness and Connector is connected to the Control Board.	pg 11, 20
22	Check the Limit Switches and Wires. Both limit circuits are to be N.C.	pg 16, 20-21
23	Not applicable to this model.	
?	Call Viking Technical Support for further assistance.	

(THIS PAGE LEFT BLANK INTENTIONALLY)

PARTS DIAGRAM – OPERATOR:

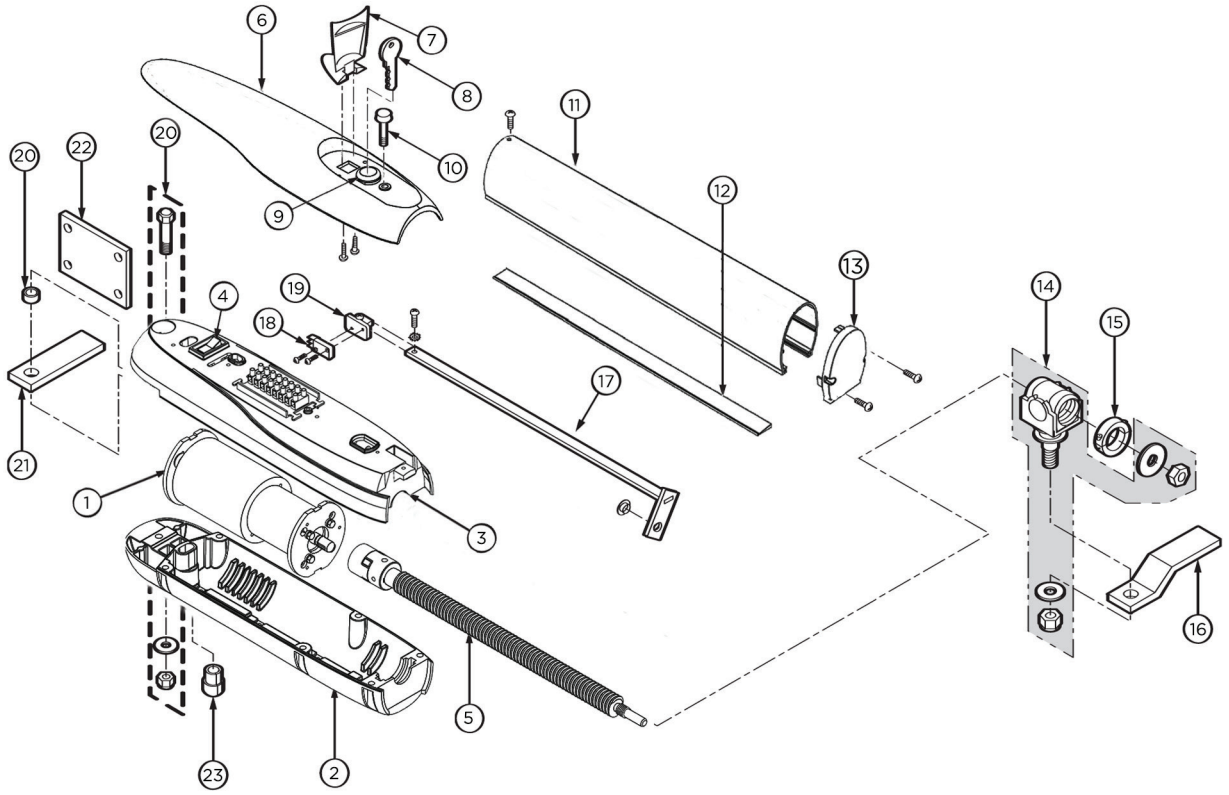

Item	Description	Part No.
1	24V DC Motor	VNXG5M0
2	G5 Motor Casing Lower	VNXG5CL
3	G5 Motor Casing Upper	VNXG5CU
4	Manual Release Switch	DUMRS10
5	Lead Screw (w/ coupler)	VNXG5LDSW
6	Cover, Terminal	VNXG5CT
7	Door, Cover Release	VNXG5DCR
8	Key, Cover Release	VNXG5K
9	Key Cylinder, Cover Release	VNXG5KC
10	Thumbscrew, Cover Release	VNXG5TSCR
11	Cover, Lead Screw	VNXG5CLS
12	Dust Brush (2)	VNXG5DB
13	End Cap, Lead Screw Cover	VNXG5ECC
14	Carrier with Hardware	VNXG5C78
15	Positive Stop	VAG5PSE
16	Mounting Bracket, Front	VNXG5MBF78
17	Limit Mounting Bar	VNXG5LMB
18	Limit Switch (2)	VNXG5LS
19	Limit Switch Bracket (2)	VNXG5LSB
20	Mounting Hardware, Back	VNXG5MHB
21	Mounting Bracket, Back	VNXG5MBB
22	Backing Plate, Bracket Mount (2)	VNXG5BPBM
23	Strain Relief (G5)	VNXG5SRCH

PARTS DIAGRAM - STANDARD ECU:

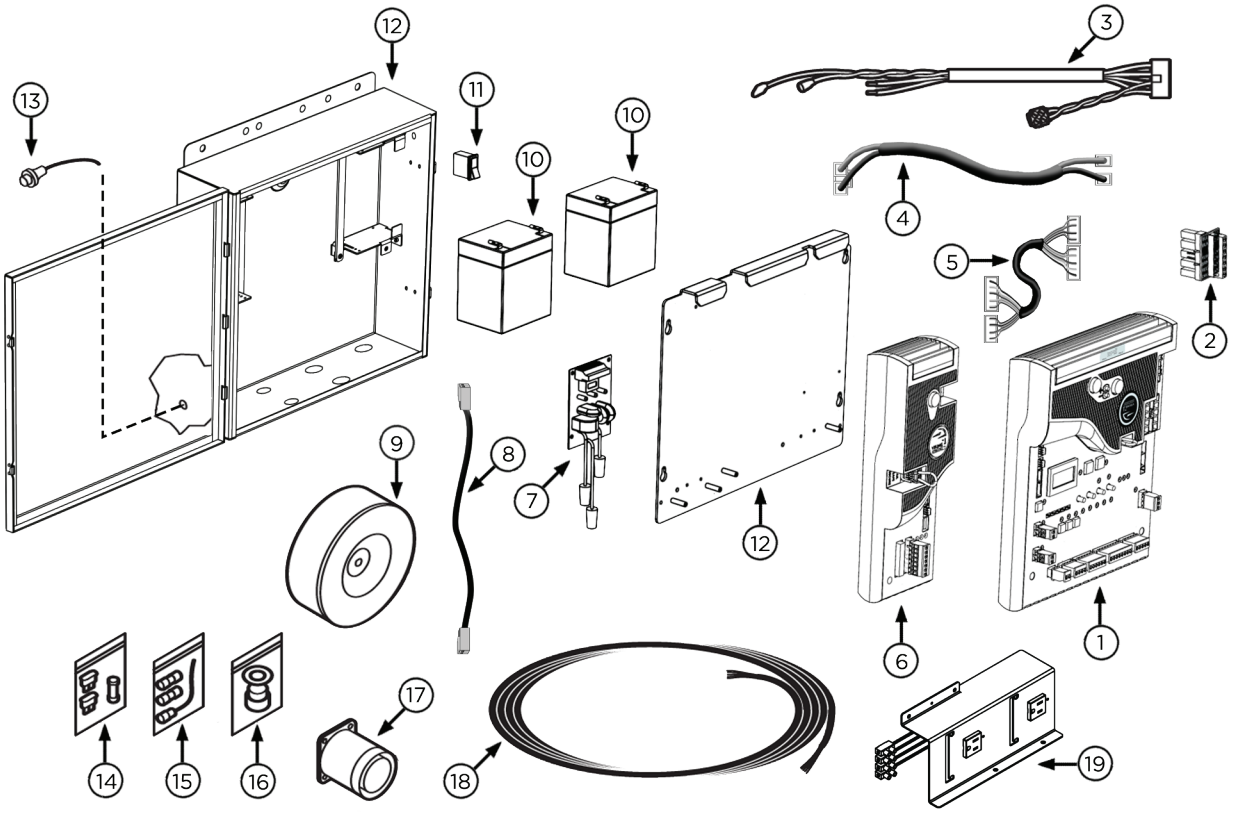

Item	Description	Part No.
1	Control Board - Primary	VFLEXPCBU18
2	Motor Connector - Primary	VECUMCM
3	Power Harness - Primary	DUPHCECU
4	Secondary Power Harness *(Dual Controller only)*	VECUSPH
5	Primary/Secondary Comm Cable *(Dual Controller only)*	VECUMSC
6	Secondary Module *(Dual Controller only)*	VFLEXSMU18
7	EMI Board	DUEMI10
8	EMI Comm Cable	HUSIGEMISW
9	Toroid Transformer - 10 amp	DUTT10
10	Battery	DUBB12
11	Battery Switch	DUMRS10
12	ECU Enclosure w/ PCB Back Plate	ECUEB
13	Alarm Reset Switch	ECUARS
14	Fuse Kit	DUFSKNX
15	ECU Antenna Kit	ECUAH
16	Strain Relief (ECU)	DH3/4NMCC
17	ECU Audio Alarm	ECUAA
18	6 Conductor Cable, per Foot	VA-CB16
19	Receptacle Box Assembly	VA-RBA

PARTS DIAGRAM - SOLAR ECU:

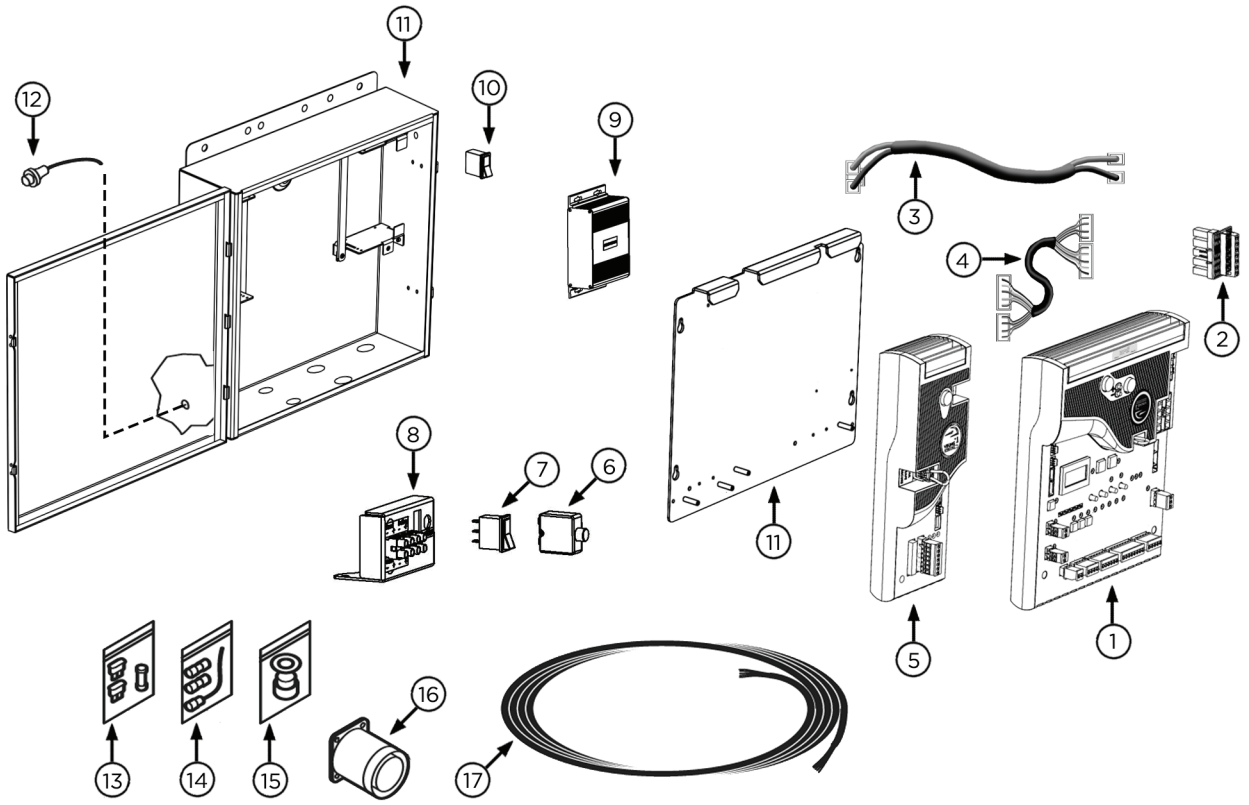

Item	Description	Part No.
1	Solar Control Board -Primary	VSPCBU18
2	Motor Connector - Primary	VECUMCM
3	Secondary Power Harness *(Dual Controller only)*	VECUSPH
4	Primary/Secondary Comm Cable *(Dual Controller only)*	VECUMSC
5	Secondary Solar Module *(Dual Controller only)*	VSSMPCBU18
6	Solar Battery Breaker	VASBB25
7	Solar Panel Switch	DUMRS5
8	Solar Terminal Block Assembly	VSTBAECU
9	Solar Charger	VSCHARGECU
10	Power Switch	DUMRS10
11	ECU Enclosure w/ PCB Back Plate	ECUEB
12	Alarm Reset Switch	ECUARS
13	Fuse Kit	DUFSKNX
14	ECU Antenna Kit	ECUAH
15	Strain Relief (ECU)	DH3/4NMCC
16	ECU Audio Alarm	ECUAA
17	6 Conductor Cable, per Foot	VA-CB16

LIMITED WARRANTY

FAAC International, Inc. ("Seller") warrants the first Purchaser of the product to be free from defects in material and workmanship for a specific period as defined by the Warranty Disclosure on the website www.vikingaccess.com. The Warranty Period commences from the date of invoice.

Control Boards, Accessories or Spare Parts factory installed or sold with any of the products above carry the same warranty period as the product they are sold with, excluding batteries that carry a maximum 2 year warranty.

Accessories or spare parts sold separately have a 1-year warranty period.

Products repaired under warranty carry the remainder of the original warranty period. For products repaired outside of warranty, the Seller warrants that all parts used for the repair will be free from defects in materials and workmanship for a period of ninety (90) days.

Defective products must be returned to Seller, freight prepaid by Purchaser, within the warranty period. A Return Material Authorization Number (RMA) must be obtained before product is returned. Items returned will be repaired or replaced, at Seller's option, upon an examination which discloses to the satisfaction of the Seller that the item is defective. The Seller will return the warranted item freight prepaid.

This limited Warranty covers the product under the normal use and service for which it was intended, provided it has been properly installed and operated. Seller's obligations under this warranty shall be limited to the repair or exchange of any part. This warranty shall not apply to products or parts thereof which have been repaired or altered, without Seller's written consent, outside of Sellers's workshop or altered in any way so as, in the judgment of Seller, to affect adversely the stability or reliability of the product(s) or has been subject of misuse, negligence, or accident, or has not been operated in accordance with the product's instructions or has been operated under conditions more severe than, or otherwise exceeding, those set forth in the specifications for such product(s).

When the warranty service involves the exchange of an operator or part, the item the Seller replaces becomes its property and the replacement becomes Purchaser's property. The Purchaser represents that all removed items are genuine and unaltered. The replacement may not be new but will be in good working order and at least functionally equivalent to the item replaced. The replacement assumes the warranty service status of the replaced item.

The products are not warranted to meet the specific requirements, if any, of safety codes of any particular state, municipality, or other jurisdiction, and the Seller doesn't assume any risk or liability whatsoever resulting from the use thereof, whether used singly or in combination with other machines or apparatus.

The Seller does not assume nor authorizes any person to assume for them any other liability in connection with the sale or use of the products of beyond that extended herein.

The warranty hereinabove set forth shall not be deemed to cover maintenance parts, including, but not limited to hydraulic oil, motor brushes, or the like. No agreement to replace or repair shall constitute an admission by the Seller of any legal responsibility to effect such replacement to make such repair, or otherwise.

All products sold by the Seller are subject to design and/or appearance modifications, which are production standards at the time of shipment. The Seller may, but shall not be required to, modify or update products shipped prior to a current production standard.

THIS WARRANTY IS EXPRESSLY IN LIEU OF ALL OTHER WARRANTIES EXPRESSED OR IMPLIED INCLUDING THE WARRANTIES OF MERCHANTABILITY AND FITNESS FOR USE. THIS WARRANTY SHALL NOT APPLY TO PRODUCTS OR ANY PART THEREOF WHICH HAVE BEEN SUBJECT TO ACCIDENT, NEGLIGENCE, ALTERATION, ABUSE, OR MISUSE OR IF DAMAGE WAS DUE TO IMPROPER INSTALLATION OR USE OF IMPROPER POWER SOURCE, OR IF DAMAGE WAS CAUSED BY FIRE, FLOOD, LIGHTNING, ELECTRICAL POWER SURGE, EXPLOSION, WIND STORM, HAIL, AIRCRAFT OR VEHICLES, VANDALISM, RIOT OR CIVIL COMMOTION, OR ACTS OF GOD.

The Seller shall not be liable for any loss or damage whatsoever resulting, directly or indirectly, from the use or loss of use of the product(s). Without limiting the foregoing, this exclusion from liability embraces a Purchaser's expenses for downtime or for making up downtime, lost profit, damages for which the Purchaser may be liable to other persons, damage to property, and injury to or death of any persons.

This limited warranty extends only to wholesale customers who buy directly through the Seller's normal distribution channels. The Seller does not warrant its products to end consumers. Consumers must inquire from their selling dealer as to the nature and extent of that dealer's warranty, if any.

THE LIMITED WARRANTY OFFERED HEREIN IS THE SOLE AND EXCLUSIVE REMEDY AVAILABLE TO THE PURCHASER. CORRECTION OF DEFECTS, IN THE MANNER AND FOR THE PERIOD OF TIME DESCRIBED HEREIN, SHALL CONSTITUTE THE COMPLETE FULFILLMENT OF ALL LIABILITIES OF SELLER TO THE PURCHASER WITH RESPECT TO THE COVERED PRODUCT, AND SHALL CONSTITUTE FULL SATISFACTION OF ALL CLAIMS, WHETHER BASED ON CONTRACT, NEGLIGENCE, STRICT LIABILITY OR OTHERWISE. IN NO EVENT SHALL SELLER BE LIABLE FOR ANY LOSS OF PROFITS OR ANY INDIRECT, CONSEQUENTIAL, INCIDENTAL, SPECIAL OR PUNITIVE DAMAGES ARISING OUT OF SELLER'S BREACH OF THIS LIMITED WARRANTY, OR ARISING OUT OF THE CUSTOMER'S INABILITY TO USE THE COVERED PRODUCT, EVEN IF SELLER HAS BEEN ADVISED OF THE POSSIBILITY OF SUCH DAMAGES.

Some states do not allow the exclusion or limitation of incidental or consequential damages, so the above limitation may not apply to a particular Purchaser. This Limited Warranty gives the Purchaser specific legal rights. The Purchaser may also have other rights, which vary from state to state.

VIKING ACCESSORIES

FOR STANDARD 24V ECU ONLY:

VIKING KONNECT Primary/Secondary Kit Secure and reliable Primary/Secondary communication between two single gate operators or ECU's using Viking's Konnect technology.
Part# VA-KONNECT-MS

*ECU Operators require (2) Antenna Extension Cables (part# VA-RPSMA)****

**** NOT COMPATIBLE for Solar Mode setting on Control Board (if applicable)****

VIKING MONITOR Off-site access to operator diagnostics. With the Viking Monitor App, this tool allows you to monitor and label multiple operators by site and location for quick reference. Provides error notifications, operator status, settings and diagnostic information.
Part# VA-MONITOR

*ECU Operators require (1) Antenna Extension Cable (part# VA-RPSMA)****

VIKING AC SURGE PRO Adds another layer of protection to the high voltage power supply of your gate operator. Connecting the AC Surge Pro in parallel to the EMI Board, provides a dual layer of protection from surges up to 20,000 Volts / 10,000 Amps. **Part# VA-SURGE PRO AC**

VIKING 24V SOLAR KIT The components included in this package are intended to provide sufficient power for general applications.
Part# VA-SOCHP

This Kit includes the following components:

(2)	**12V 40W Solar Panels**	Part# VA-SO40W	**(wired in series = 24V 80W)**
(2)	**12V 35Ah batteries**	Part# DUBA35	**(wired in series = 24V 35Ah)**
(1)	**Solar Charger**	Part# SOCHR10	
(1)	**Solar Power Harness**	Part# SOHAR	

⚠ **NOTE:** The number of cycles achieved from this kit are dependent upon the following and may require increased panel and battery capacities:

- Power consumption of all accessories being used
- Average solar radiation of geographic location

VIKING ACCESSORIES

FOR SOLAR 12V ECU:

VIKING 12V 40W Solar Panel **Part# VA-SO40W**

VIKING 12V 35Ah Battery **Part# DUBA35**

⚠ **NOTE:** The number of cycles achieved from this kit are dependent upon the following and may require increased panel and battery capacities:

- Power consumption of all accessories being used
- Average solar radiation of geographic location

(THIS PAGE LEFT BLANK INTENTIONALLY)

OUR CONTINUOUS COMMITMENT TO EXCELLENCE

Viking Access Systems is continuously working hard to identify and design products that will appeal to the industry and its needs. As technology continues to advance, we have developed a completely efficient and intelligent line of gate operators to meet the changing demands. These machines offer: full UL325 and UL991 compliance, soft-start and soft-stop, intelligent obstruction sensors, continuous operation (100% duty cycle) and extreme power efficiency. Innovative features include: adaptive and self-learning algorithms, redundancy design in both hardware and software to ensure operation and functionality, protection from lightning, short circuit and power surges, and our exclusive helical gearing offering the highest efficiency rating in the industry. Our entire product line is continually modified and improved based on the latest technology and our customer's valuable feedback. The results are products that offer accuracy, efficiency, reliability and performance, all in sleek, high-tech designs.

We pledge to continue establishing ourself as the leader in high quality, innovative gate operators by developing "Next Level" technology. We are committed to providing safety and convenience with innovative solutions for every security gate need.

VIKING
ACCESS SYSTEMS™

VIKING ACCESS SYSTEMS™ VIKING ACCESS SYSTEMS™ VIKING ACCESS SYSTEMS™

INSTALLATION DATE: _____

COMPANY / INSTALLER: _____

CONTACT: _____

SERIAL NUMBER(S): _____

ALL INSTALLATION, MAINTENANCE AND REPAIR WORK MUST BE DOCUMENTED AND MADE AVAILABLE TO THE USER.

VIKING ACCESS SYSTEMS
17595 Cartwright Rd Irvine, CA 92614
Phone 800.908.0884
Fax 949.753.1640
www.vikingaccess.com

A BRAND OF FAAC TECHNOLOGIES